Please read and save these instructions. Read carefully before attempting to assemble, install, operate or maintain the product described. Protect yourself and others by observing all safety information. Failure to comply with instructions could result in personal injury and/or property damage! Retain instructions for future reference.

NightBright Lighting System

Description

This lighting system is designed for use with 115/230V 1/2, 3/4 and 1 HP floating fountain systems. Optional colored lamp kits are available in red, green and blue. All mounting hardware is included to attach lights to fountain and connect to control center with factory installed timer.

General Safety Information

Carefully read and follow all safety instructions in this manual and on control center. Keep safety labels in good condition. Replace missing or damaged safety labels.

This is a SAFETY ALERT SYMBOL. When you see this symbol on the pump or in the manual, look for one of the following signal words and be alert to the potential for personal injury or property damage.

DANGER ***Warns of hazards that WILL cause serious personal injury, death or major property damage if ignored.***

WARNING ***Warns of hazards that CAN cause serious personal injury or death, if ignored.***

CAUTION ***Warns of hazards that MAY cause minor personal injury, product or property damage if ignored.***

IMPORTANT: Indicates factors concerned with operation, installation, assembly or maintenance which could result in damage to the machine or equipment if ignored.

NOTE: Indicates special instructions which are important but are not related to hazards.

WARNING ***Read these warnings and instructions carefully. Failure to follow could result in serious bodily injury and/or property damage.***

WARNING ***This product contains chemicals known to the State of California to cause cancer and birth defects or other reproductive harm.***

WARNING ***This unit not tested for use in swimming pool areas.***

WARNING

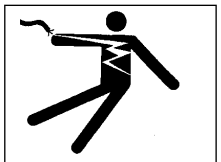

Hazardous voltage. Can shock, burn or cause death. Ground system before connecting to power supply.

Electrical installations shall be in accordance with National Electric Code (NEC) and all applicable local codes and ordinances. A licensed electrician should perform installation.

Be sure system is connected to a circuit equipped with a fuse or circuit breaker of proper size.

Protect the power cable from coming in contact with sharp objects, oil, grease, hot surfaces or chemicals. DO NOT kink the power cable. If damaged replace immediately.

Install all electrical equipment in protected area to prevent mechanical damage which could produce serious electrical shock and/or equipment failure.

NEVER leave the control box, fused disconnect switch, or covers open (either partially or completely) when not being worked on by a competent electrician or repairman.

Always disconnect power source before performing any work on or near the motor, lights or connected load. If the power disconnect point is out-of-sight, lock it in the open position and/or tag it to prevent unexpected application of power. Failure to do so could result in fatal electrical shock or bodily injury.

Specifications

120 volt
3 - LED lamps
100 ft. power cord

DANGER

DO NOT use this system in flammable liquids such as gasoline, fuel oil, kerosene, etc. Failure to follow this warning could result in property damage and/or personal injury.

Unpacking

Unpack and inspect system for damage. Verify you have received the following components:

1. Instructions
2. Warranty
3. Lights with 100 ft. power cord
4. Mounting hardware
   a. Brackets (3)
   b. 1/4-20 x 5/8 bolts (6)
   c. 1/4-20 locknuts (3)
   d. 1/4 lock washer (3)
5. Shrink tube splice kit
6. Wire tie

INSTALLATION INSTRUCTIONS

1. Required Tools and Supplies:
   a. Flat screwdriver
   b. 7/16" wrenches (2)
   c. Crimping tool (for cable splicing only)
   d. Torch or heat gun for shrink tube splice kit (for cable splicing only)
   e. Multimeter to check voltage, current and insulation resistance to ground
2. Install Nightbright lighting system to float. (See Fig 1).
   a. Assemble lights (1) to mounting brackets (2) using bolts (3), and locknuts (5).

NightBright Lighting System

Installation (Continued)

b. Attach light/bracket assemblies to the threaded inserts in top of float, using bolts (3) and lockwashers (4). (Install in alternating inserts if 6 inserts are present in float.)

c. Adjust lights to provide desired illumination. (See Fig 1).

d. Tighten all bolts & screws until seated.

e. Determine required cable length. Splice additional cable up to 250 feet total cable length using included heat shrink splice kit. Use 18 AWG SOOW or larger cable only. DO NOT EXCEED maximum cable length or use smaller cable than specified, as system damage may occur.

f. Attach light system cord to fountain system cord with included nylon wire tie.

⚠DANGER

Never enter the water either wading, swimming or in a boat with the pump power on, as this may result in severe electrical shock.

3. Only install this system in ponds where no swimming, wading, boating or fishing is allowed. Disconnect power to system before fishing or entering the water.
4. Post appropriate warning signs per local and state codes.
5. Place power cord so that it rests on bottom of pond away from sharp rocks or vegetation so it can be easily removed without being damaged or becoming entangled. Leave enough slack to accommodate anticipated water level fluctuations.

NOTE: It is suggested that the underwater power cables be installed in conduit from the panel to 4 -5 ft into the water to prevent possible cable damage.

6. Before connecting the unit to the control center, check to insure there is no leakage to ground. This can be done by using an ohm meter and setting the scale to its highest setting (i.e. Rx100K). Connect one ohmmeter lead to the unit power cord ground and to one of the power conductors. It should read infinite or at least 2 mega ohms. Repeat with the other conductor. If reading is below 2 mega ohms on either conductor contact Customer Service Help Line at 1-800-742-5044.

⚠DANGER

"NO SWIMMING" AND OR WARNING SIGNS SHOULD BE POSTED PER STATE AND LOCAL CODES.

⚠CAUTION ***Water leaving nozzle is at high velocity and can cause bodily injury if contact is made.***

⚠DANGER

Always use caution when operating electrical controls in damp areas. If possible, avoid all contact with electrical equipment during thunderstorms or extreme damp conditions.

7. Connect Nightbright lighting system to control center. (See Fig 2).
8. All work must be done in compliance with local and national electrical codes by licensed, qualified electrician. Refer to Fig. 2 in these instructions or on inside of panel door for proper wiring.
9. Always keep control center door closed and locked when not servicing.
10. Have a licensed, qualified electrician make final connections of Nightbright lighting system to system control center.
11. Have a licensed, qualified electrician make connection to power source.
12. Apply power to unit and set timers as described in the Setting Timers section.
13. Test the ground fault interrupter (GFI) for proper operation by depressing the "test" button. The fountain and lights should shut off. Press the "reset" button to restart the system. If pressing the "test" button does not stop the unit, immediately shut off power to unit and contact Customer Service Help Line at 1-800-742-5044.

⚠WARNING

FAILURE TO CONNECT THIS UNIT, WITH THE GFI, TO A PROPERLY GROUNDED POWER SUPPLY MAY RESULT IN SEVERE ELECTRICAL SHOCK.

Setting timer

IMPORTANT: Rotate dial in clockwise direction only! Rotating dial counter clockwise will damage timer!

1. Set the on-off time zones.
   a) 6 trippers (3 red-on and 3 white-off) stored below the dial, are included with each timer for setting up to 3 on-off time zones.
   b) Install the red tripper at the desired on time and the white tripper at the desired off time.
   c) Rotate the dial clockwise to verify operation of the trippers.
   d) The timer may be overridden by turning the small on/off dial in the upper right hand corner of the timer. Timer will automatically reset when next time zone occurs unless manual override was set within 1 hour of on or off cycle.
2. Setting the clock. (24 hr clock)
   a) Turn the dial clockwise until the arrowhead is aligned with the proper time.
   b) The timer includes built in battery backup for maintaining time during power outages.

95 North Oak Street • Kendallville, IN 46755
Copyright 2009. All rights reserved.

INSTALLATION CHECK LIST

- ☐ Read installation instructions and warnings.
- ☐ Post appropriate warning signs.
- ☐ Install NightBright lighting system to float.
- ☐ Check insulation resistance to ground.
- ☐ Connect NightBright lighting system to control center.
- ☐ Power up unit.
- ☐ Test operation of GFI by pressing the "Test" Button.
- ☐ Set timer.
- ☐ File instructions for future reference.

⚠WARNING

DO NOT handle pump or lights with wet hands or when standing in water as fatal electrical shock could occur. Disconnect main power supply before handling system for any reason.

Troubleshooting Chart

Symptom	Possible Cause(s)	Corrective Action
Lights dim or won't light	1. Circuit breaker tripped	1. Reset circuit breaker.
	2. Low Voltage	2. Verify voltage.
	3. GFI Tripped	3. Reset GFI.
	4. Excessive Cable Length	4. Verify acceptable maximum cable length.
	5. Timer/clock not set	5. Set clock to local time and timers for desired cycle. See Section on Setting Timers.
	6. Lights out of position	6. Aim lights to provide desired illumination.
GFI Trips	1. Electrical storm can trip GFI	1. Reset GFI.
	2. Short in system	2. Disconnect power and check cord for damage. If cord is damaged contact Customer Service Help Line at 1-800-742-5044.
	3. Defective power cable	3. Disconnect power and check cord for damage. If cord is damaged contact Customer Service Help Line at 1-800-742-5044.

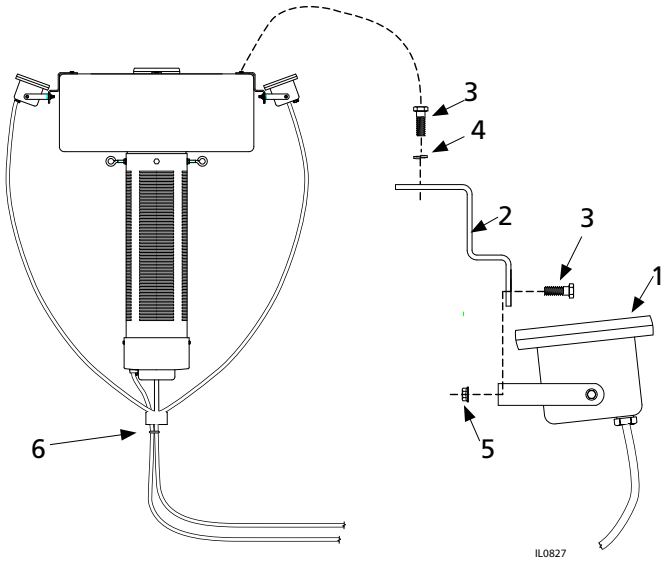

Figure 1 - Installation

95 North Oak Street • Kendallville, IN 46755
Copyright 2009. All rights reserved.

NightBright Lighting System

⚠WARNING ***Never enter the water either wading, swimming or in a boat with the pump power on, as this may result in severe electrical shock.***

⚠WARNING ***This product contains chemicals known to the State of California to cause cancer and birth defects or other reproductive harm.***

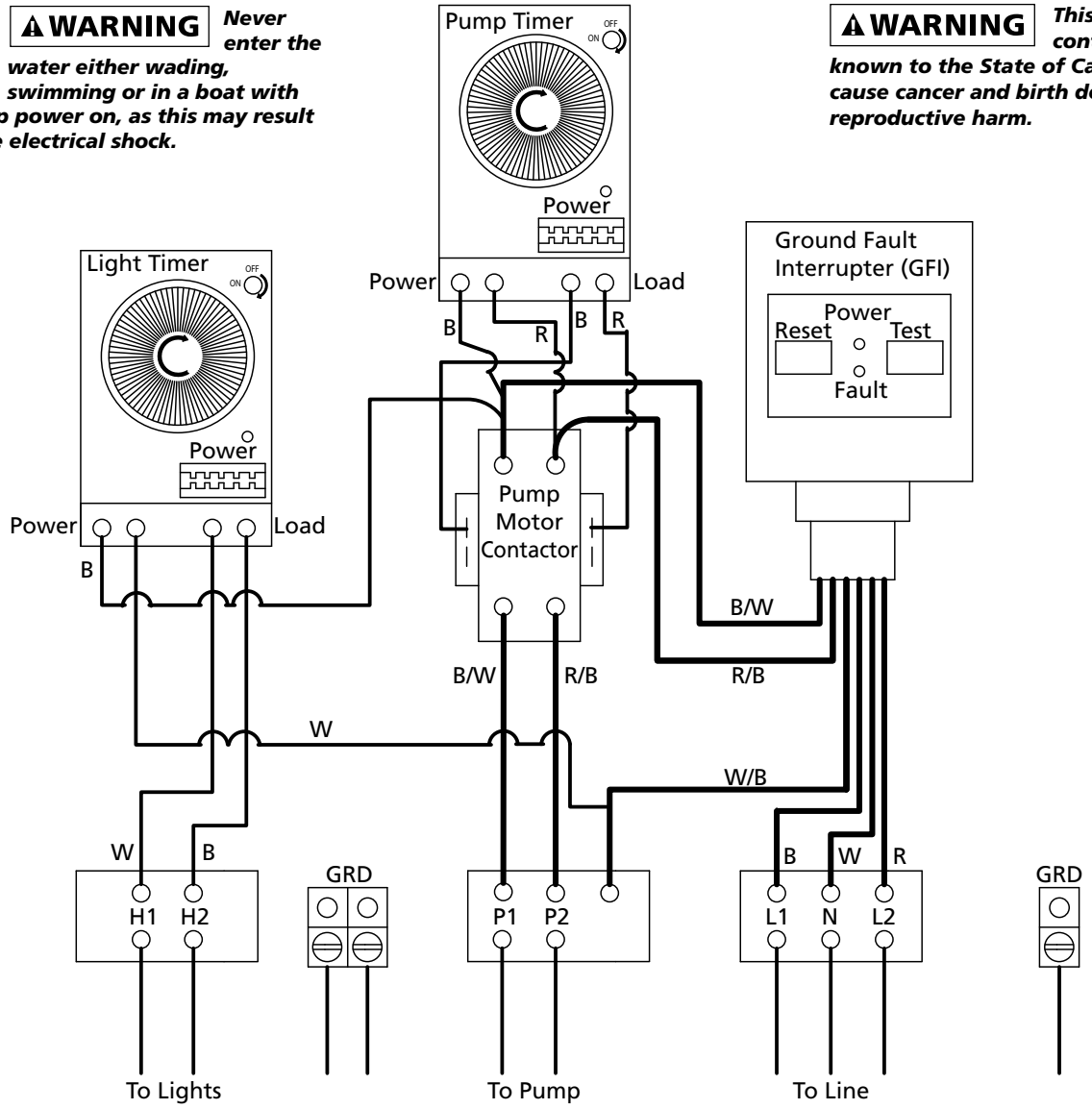

⚠WARNING

Hazardous voltage. Can shock, burn or cause death. Ground system before connecting to power supply.

Electrical installations shall be in accordance with National Electric Code (NEC) and all applicable local codes and ordinances. A licensed electrician should perform installation.

Be sure system is connected to a circuit equipped with a fuse or circuit breaker of proper size.

NEVER leave the control box, fused disconnect switch, or covers open (either partially or completely) when not being worked on by a competent electrician or repairman.

Figure 2 - Control Center Schematic

Always disconnect power source before performing any work on or near the motor, lights or connected load. If the power disconnect point is out-of-sight, lock it in the open position and/or tag it to prevent unexpected application of power. Failure to do so could result in fatal electrical shock or bodily injury.

95 North Oak Street • Kendallville, IN 46755
Copyright 2009. All rights reserved.

Ref No.	Description	Part No.	Qty
1	Light Set	023056	1
2	SS Light Bracket	022900	3
3	1/4-20 x 5/8 SS Bolt	*021628	6
4	1/4 SS Lock Washer	*021629	3
5	1/4-20 SS Locknut Hex Flange	127021	3
6	Wire Tie	022283	1
▲	Replacement Lamps (Sets of 3)		
	White	023060	1
	Red	023059	1
	Green	023058	1
	Blue	023057	1
▲	Shrink Tube Splice Kit	022919	1

(*) Standard hardware item, available locally

(▲) Not Shown

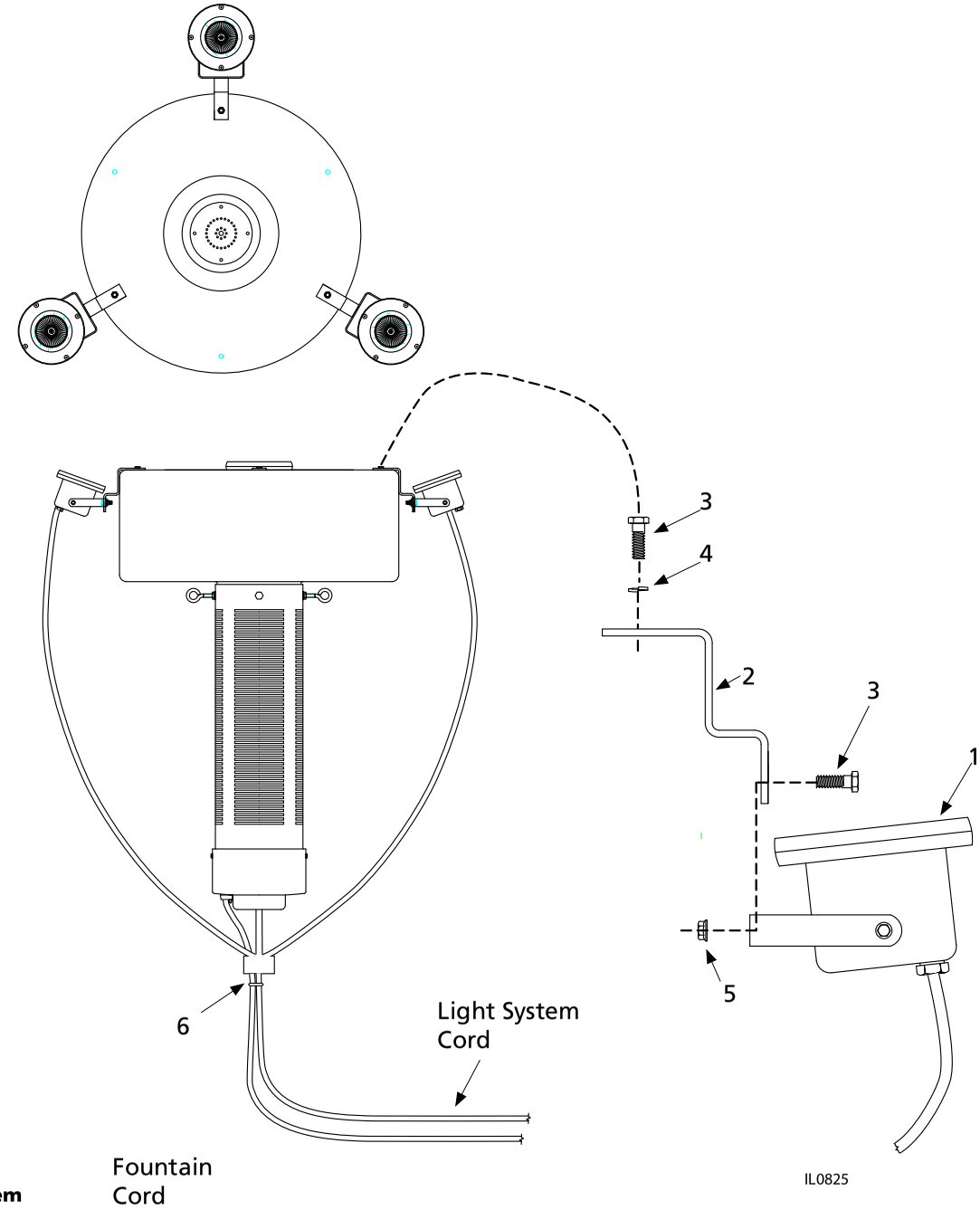

Figure 3 – Parts Illustration for NightBright Lighting System

95 North Oak Street • Kendallville, IN 46755

Copyright 2009. All rights reserved.

Service Record

NightBright Lighting System

Date	Maintenance performed	Repair components required

95 North Oak Street • Kendallville, IN 46755
Copyright 2009. All rights reserved.