Please read and save these instructions. Read carefully before attempting to assemble, install, operate or maintain the product described. Protect yourself and others by observing all safety information. Failure to comply with instructions could result in personal injury and/or property damage! Retain instructions for future reference.

NightBright Lighting System

Description

This lighting system is designed for use with 115V floating fountain systems. Optional colored lamp kits are available in red, green and blue. All mounting hardware is included to attach lights to fountain.

General Safety Information

Carefully read and follow all safety instructions in this manual. Keep safety labels in good condition. Replace missing or damaged safety labels.

This is a SAFETY ALERT SYMBOL. When you see this symbol on the pump or in the manual, look for one of the following signal words and be alert to the potential for personal injury or property damage.

DANGER ***Warns of hazards that WILL cause serious personal injury, death or major property damage if ignored.***

WARNING ***Warns of hazards that CAN cause serious personal injury or death, if ignored.***

CAUTION ***Warns of hazards that MAY cause minor personal injury, product or property damage if ignored.***

IMPORTANT: Indicates factors concerned with operation, installation, assembly or maintenance which could result in damage to the machine or equipment if ignored.

NOTE: Indicates special instructions which are important but are not related to hazards.

WARNING ***Read these warnings and instructions carefully. Failure to follow could result in serious bodily injury and/or property damage.***

WARNING ***This product contains chemicals known to the State of California to cause cancer and birth defects or other reproductive harm.***

WARNING ***This unit not tested for use in swimming pool areas.***

WARNING

Hazardous voltage. Can shock, burn or cause death. Ground system before connecting to power supply.

Electrical installations shall be in accordance with National Electric Code (NEC) and all applicable local codes and ordinances. A licensed electrician should perform installation.

WARNING ***System furnished with a 100 ft power cord with three prong GFI plug. – Must connect to properly grounded receptacle of grounding type. Do not remove ground pin on plug. Do not extend the cord length by splicing or with an extension cord.***

WARNING ***FAILURE TO CONNECT THIS UNIT, WITH THE GFI, TO A PROPERLY GROUNDED RECEPTACLE MAY RESULT IN SEVERE ELECTRICAL SHOCK.***

Be sure system is connected to a circuit equipped with a fuse or circuit breaker of proper size.

Protect the power cable from coming in contact with sharp objects, oil, grease, hot surfaces or chemicals. DO NOT kink the power cable. If damaged replace immediately.

Install all electrical equipment in protected area to prevent mechanical damage which could produce serious electrical shock and/or equipment failure.

NEVER leave the control box, fused disconnect switch, or covers open (either partially or completely) when not being worked on by a competent electrician or repairman.

Specifications

120 volt
3 - LED lamps
100 ft. power cord with GFI

Always disconnect power source before performing any work on or near the motor, lights or connected load. If the power disconnect point is out-of-sight, lock it in the open position and/or tag it to prevent unexpected application of power. Failure to do so could result in fatal electrical shock or bodily injury.

DANGER

DO NOT use this system in flammable liquids such as gasoline, fuel oil, kerosene, etc. Failure to follow this warning could result in property damage and/or personal injury.

Unpacking

Unpack and inspect system for damage. Verify you have received the following components:

1. Instructions
2. Warranty
3. Lights with 100 ft. power cord with GFI. Check for any bent prongs or a cracked case on the GFI.
4. Mounting hardware
   a. Brackets (3)
   b. 1/4-20 x 5/8 bolts (6)
   c. 1/4-20 locknuts (3)
   d. 1/4 lock washer (3)
5. Wire tie

INSTALLATION INSTRUCTIONS

1. Required Tools and Supplies:
   a. 7/16" wrenches (2)
   b. Multimeter to check voltage, current and insulation resistance to ground
2. Install Nightbright lighting system to float. (See Fig 1).

NightBright Lighting System

Installation (Continued)

a. Assemble lights (1) to mounting brackets (2) using bolts (3), and locknuts (5).

b. Attach light/bracket assemblies to the threaded inserts in top of float, using bolts (3) and lockwashers (4). (Install in alternating inserts if 6 inserts are present in float.)

c. Adjust lights to provide desired illumination. (See Fig 1).

d. Tighten all bolts & screws until seated.

e. Attach light system cord to fountain system cord with included nylon wire tie.

⚠DANGER

Never enter the water either wading, swimming or in a boat with the pump power on, as this may result in severe electrical shock.

3. Only install this system in ponds where no swimming, wading, boating or fishing is allowed. Disconnect power to system before fishing or entering the water.
4. Post appropriate warning signs per local and state codes.
5. Place power cord so that it rests on bottom of pond away from sharp rocks or vegetation so it can be easily removed without being damaged or becoming entangled. Leave enough slack to accommodate anticipated water level fluctuations.

NOTE: It is suggested that the underwater power cables be installed in conduit from the panel to 4 -5 ft into the water to prevent possible cable damage.

6. Before connecting the unit to the power receptacle, check to insure there is no leakage to ground. This can be done by using an ohm meter and setting the scale to its highest setting (i.e. Rx100K). Connect one ohmmeter lead to the unit power cord ground (round prong) and to one of the flat prongs. It should read infinite or at least 2 mega ohms. Repeat with the other prong. If reading is below 2 mega ohms on either prong contact Customer Service Help Line listed at bottom of page.

⚠DANGER

"NO SWIMMING" AND OR WARNING SIGNS SHOULD BE POSTED PER STATE AND LOCAL CODES.

⚠CAUTION ***Water leaving nozzle is at high velocity and can cause bodily injury if contact is made.***

⚠DANGER

Always use caution when operating electrical controls in damp areas. If possible, avoid all contact with electrical equipment during thunderstorms or extreme damp conditions.

7. **Do Not Operate System on an Extension Cord.** If no power is accessible at the pond, contract a licensed electrician to install the proper power supply in accordance with National Electric Code and all applicable local codes and ordinances.
8. After installing the unit, checking ground and connecting power to the unit, the unit can be powered up. Check operation of the GFI by pushing the "Test" button, the unit should stop. Pushing the "Reset" button should restart the unit. If pressing the "test" button does not stop the unit, immediately shut off power to unit and contact Customer Service Help Line listed at bottom of page.

⚠WARNING

FAILURE TO CONNECT THIS UNIT, WITH THE GFI, TO A PROPERLY GROUNDED POWER SUPPLY MAY RESULT IN SEVERE ELECTRICAL SHOCK.

INSTALLATION CHECK LIST

- ☐ Read installation instructions and warnings.
- ☐ Post appropriate warning signs.
- ☐ Install NightBright lighting system to float.
- ☐ Check insulation resistance to ground.
- ☐ Power up unit.
- ☐ Test operation of GFI by pressing the "Test" Button.
- ☐ File instructions for future reference.

⚠WARNING

DO NOT handle pump or lights with wet hands or when standing in water as fatal electrical shock could occur. Disconnect main power supply before handling system for any reason.

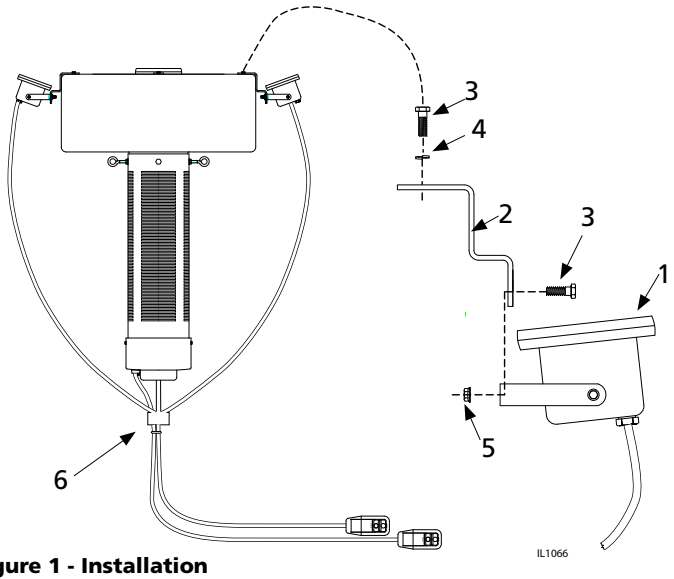

Figure 1 - Installation

95 North Oak Street • Kendallville, IN 46755
Copyright 2009. All rights reserved.

NightBright Lighting System

Ref No.	Description	Part No.	Qty
1	Light Set	023368	1
2	SS Light Bracket	022900	3
3	1/4-20 x 5/8 SS Bolt	*021628	6
4	1/4 SS Lock Washer	*021629	3
5	1/4-20 SS Locknut Hex Flange	127021	3
6	Wire tie	022283	1
7	GFI	021614	1
▲	Replacement Lamps (set of 3)		
	White	023060	3
	Red	023059	3
	Green	023058	3
	Blue	023057	3

(*) Standard hardware item, available locally

(▲) Not Shown

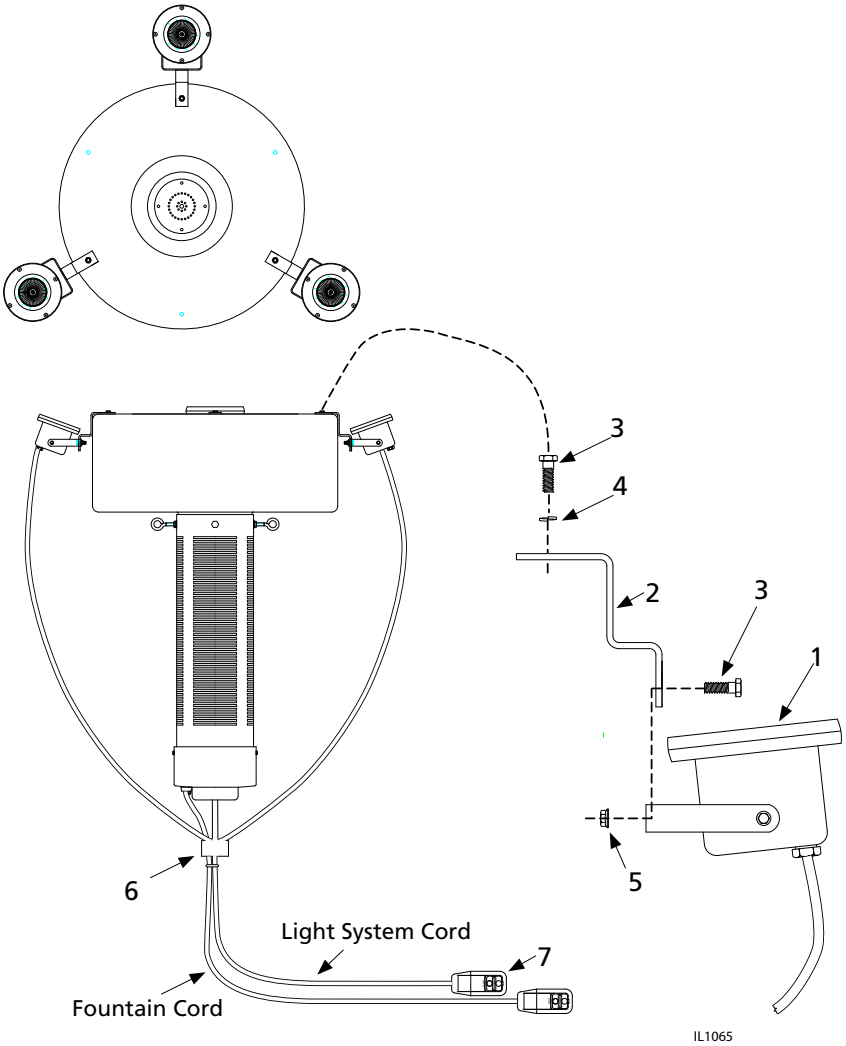

Figure 3 – Parts Illustration for NightBright Lighting System

Troubleshooting Chart

Symptom	Possible Cause(s)	Corrective Action
Lights dim or won't light	1. Circuit breaker tripped	1. Reset circuit breaker.
	2. Low Voltage	2. Verify voltage.
	3. GFI Tripped	3. Reset GFI.
	4. Lights out of position	4. Aim lights to provide desired illumination.
GFI Trips	1. Electrical storm can trip GFI	1. Reset GFI.
	2. Short in system	2. Disconnect power and check cord for damage. If cord is damaged contact Customer Service Help Line at 1-800-742-5044.
	3. Defective power cable	3. Disconnect power and check cord for damage. If cord is damaged contact Customer Service Help Line at 1-800-742-5044.

95 North Oak Street • Kendallville, IN 46755
Copyright 2009. All rights reserved.

Service Record

NightBright Lighting System

Date	Maintenance performed	Repair components required

95 North Oak Street • Kendallville, IN 46755
Copyright 2009. All rights reserved.