FW0714
1114
Supersedes
1009

FLINT & WALLING
Zoeller Family of Water Solutions™

Multi-Stage Effluent 4 Inch Submersible Pumps

Multi-stage effluent submersible pumps are used in on-site applications that demand more head than a traditional single stage centrifugal submersible pump. This need is met by offering a complete line of submersible effluent turbine pumps. These pumps have been proven in field applications and have many years of development behind them.

Typical applications include mound systems, drip systems, and recirculation media filters. All units include cool running submersible motors that do not require external water flow to prevent overheating. Therefore, an outer pump sleeve is not required for models less than 2 HP. Pumps can be installed directly in a dose tank as long as an effluent filter is used on the septic tank outlet. These pumps can also be used in conjunction with a filtered STEP system.

DESIGNED • MACHINED ASSEMBLED IN THE USA
Using a majority of Made in America materials and components

C US
UL Std. No. 778

FEATURES:

- Corrosion resistant
- Models available: 10, 19, 27 35 and 55 GPM.
- 1/2 thru 1 HP units
- 115 and 230 volts
- 1-1/4" discharge (10, 19, 27 gpm) or 2" discharge (35 and 55 GPM)
- Heavy wall stainless steel pump shell
- NEMA standard submersible motors
- Stainless steel hex drive pump shaft
- High efficiency floating stack
- Glass-filled Noryl® discharge and mounting ring (1/2 thru 1 HP; 10, 19, and 27 gpm models)
- Stainless steel discharge and mounting ring (35 and 55 GPM models)
- No external capacitors or relays required for starting.
- Check valve not included
- 10 feet of #14-2G SJOW replaceable motor lead assembly

MULTI-STAGE EFFLUENT SUBMERSIBLES

11 GPM Models

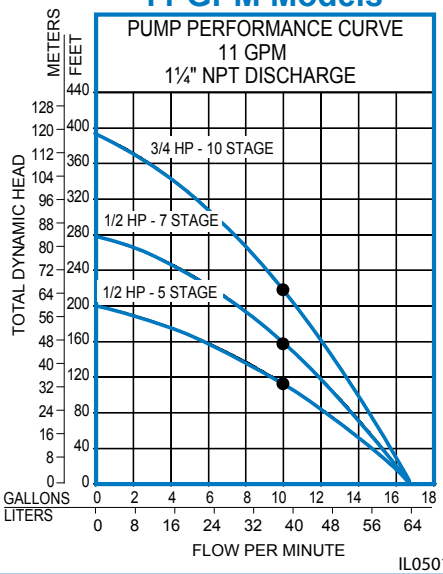

IL0501

Part Number	HP	Voltage	Phase	Amps	Stages	Height
F5030-0005‡	1/2	115	1	12.0	5	21-1/2″
F5030-0006‡	1/2	230	1	6.0	5	21-1/2″
F5030-0007‡	1/2	115	1	12.0	7	23-1/8″
F5030-0008‡	1/2	230	1	6.0	7	23-1/8″
F5030-0009‡	3/4	230	1	8.0	10	27-13/16″
F5030-0013‡	1/2	115	1	12.0	5	21-1/2″

‡Includes 10 feet of #14-2G SJ0W-A power cord

19 GPM Models

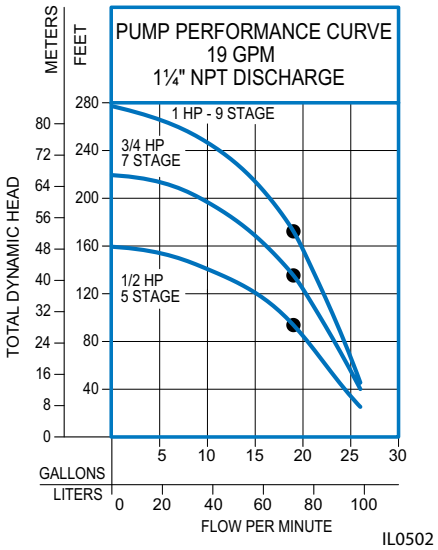

IL0502

Part Number	HP	Voltage	Phase	Amps	Stages	Height
F5031-0005‡	1/2	115	1	12.0	5	21-15/16″
F5031-0006‡	1/2	230	1	6.0	5	21-15/16″
F5031-0007‡	3/4	230	1	8.0	7	25-1/16″
F5031-0008‡	1	230	1	9.8	9	28-1/8″

‡Includes 10 feet of #14-2G SJ0W-A power cord

27 GPM Models

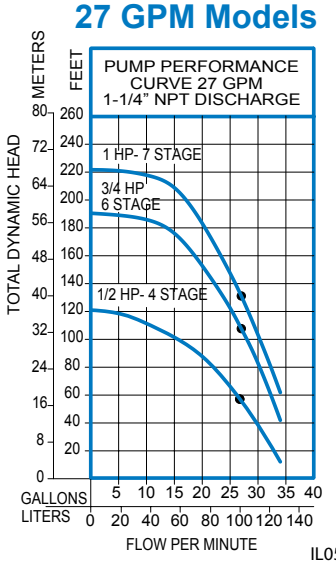

IL0503

Part Number	HP	Voltage	Phase	Amps	Stages	Height
F5032-0005‡	1/2	115	1	12.0	4	21-3/16″
F5032-0006‡	1/2	230	1	6.0	4	21-3/16″
F5032-0007‡	3/4	230	1	8.0	6	24-3/16″
F5032-0008‡	1	230	1	9.8	7	26-7/16″

‡Includes 10 feet of #14-2G SJ0W-A power cord

35 GPM Models

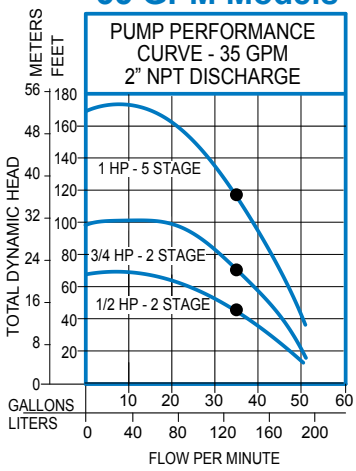

IL0504

Part Number	HP	Voltage	Phase	Amps	Stages	Height
F5033-0005‡	1/2	115	1	12.0	2	18-7/8″
F5033-0006‡	1/2	230	1	6.0	2	18-7/8″
F5033-0007‡	3/4	230	1	8.0	3	20-1/4′
F5033-0011‡	1	230	1	9.8	5	30-1/8″

‡Includes 10 feet of #14-2G SJ0W-A power cord

Copyright © 2014 Flint & Walling

FLINT & WALLING
Zoeller Family of Water Solutions™

55 GPM Models

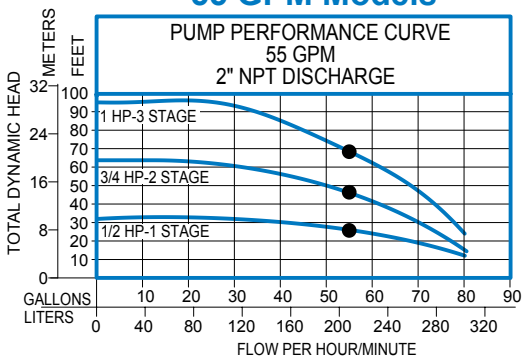

IL0505

Part Number	HP	Voltage	Phase	Amps	Stages	Height
F5034-0005‡	1/2	115	1	12.0	1	17-3/4″
F5034-0006‡	1/2	230	1	6.0	1	17-3/4″
F5034-0007‡	3/4	230	1	8.0	2	21-11/16″
F5034-0016‡	1	230	1	9.8	3	24-7/8″

‡Includes 10 feet of #14-2G SJ0W-A power cord

GPM	Model		HP	Motor Type	Depth to Water Level in Feet - Capacities in Gallons per Minute																Maximum	
	115V	230V			20′	40′	60′	80′	100′	120′	140′	160′	180′	200′	225′	250′	275′	300′	325′	350′	Ft..	PSI
11 GPM	F5030-0005	F5030-0006	1/2	2-wire		14.7	13.6	12.3	10.9	9.4	7.7	5.7	3.5								200	87
	F5030-0007	F5030-0008	1/2	2-wire		15.3	14.5	13.7	12.8	11.9	10.9	9.9	8.8	7.6	5.9	3.7					277	120
		F5030-0009	3/4	2-wire		15.7	15.1	14.5	14.0	13.3	12.7	12.1	11.4	10.7	9.7	8.7	7.6	6.4	5.1	3.5	396	173
19 GPM	F5031-0005	F5031-0006	1/2	2-wire		24.6	22.7	20.5	17.9	15.0	10.4										159	69
		F5031-0007	3/4	2-wire			24.6	23.3	21.7	20.0	18.2	16.0	13.3	9.6							219	95
		F5031-0008	1	2-wire			25.5	24.4	23.2	22.1	20.7	19.4	17.8	16.2	13.7	10.7	5.0				277	120
27 GPM	F5032-0005	F5032-0006	1/2	2-wire		31.0	27.0	22.0	24.0	14.0											122	53
		F5032-0007	3/4	2-wire			32.0	30.0	27.0	24.0	21.0	16.0	5.0								191	83
		F5032-0008	1	2-wire			34.0	32.0	30.0	27.0	24.0	22.0	18.0	13.0							222	96
35 GPM	F5033-0005	F5033-0006	1/2	2-wire	48.0	39.0	26.0														67	29
		F5033-0007	3/4	2-wire		43.0	40.0	31.0	20.0												100	43
		F5033-0011	1	2-wire	53.0	50.0	46.0	42.0	38.0	33.0	28.0	21.0									173	75
55 GPM	F5034-0005	F5034-0006	1/2	2-wire	71.0																31	13
		F5034-0007	3/4	2-wire	77.0	64.0	39.0														67	29
		F5034-0016	1	2-wire	82.0	74.0	62.0	45.0													96	41

Copyright © 2014 Flint & Walling

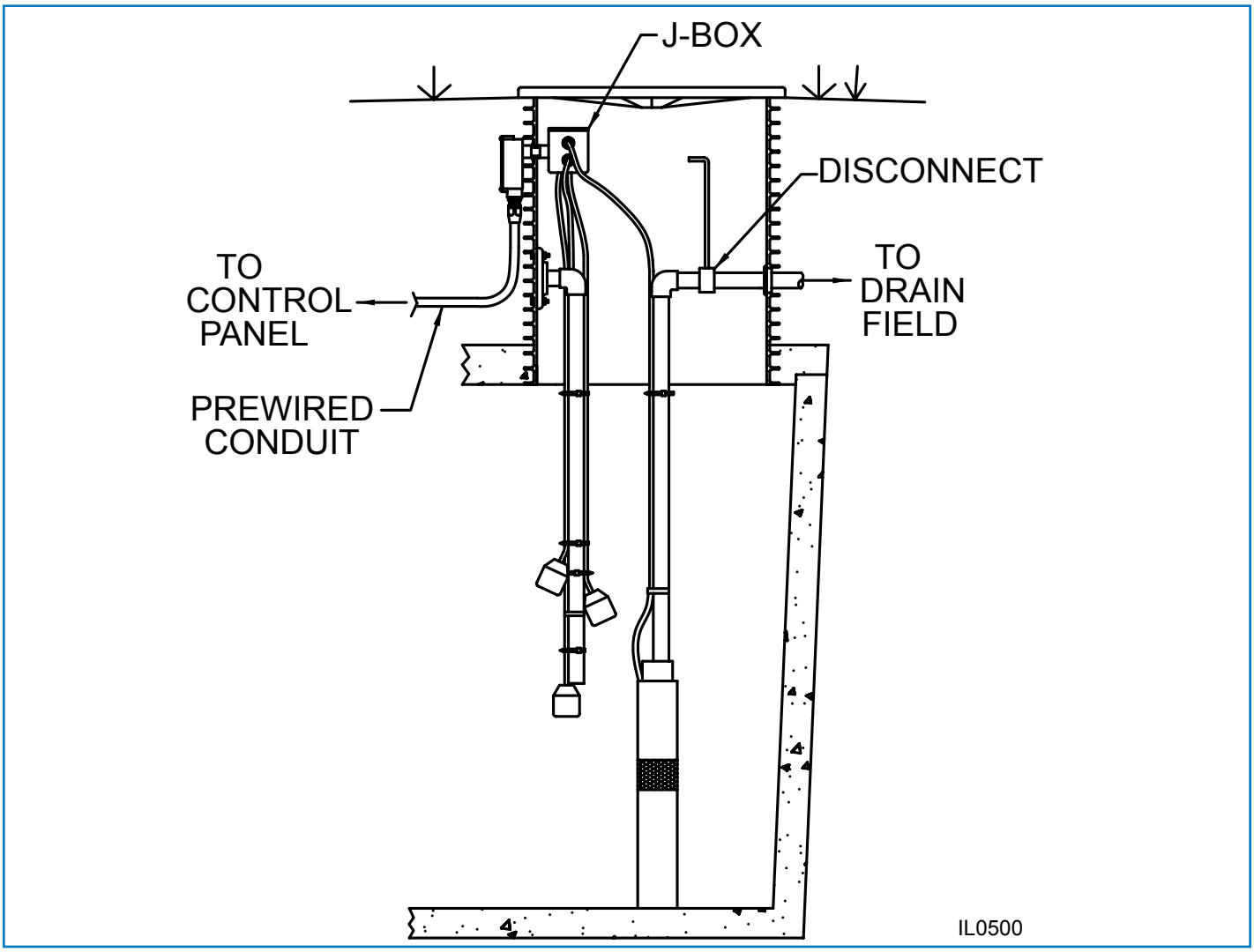

Copyright © 2014 Flint & Walling