Your Peace of Mind is Our Top Priority®

Product information presented here reflects conditions at time of publication. Consult factory regarding discrepancies or inconsistencies.

ZOELLER®
PUMP COMPANY
Zoeller Family of Water Solutions™

SECTION: 2.15.020
FM2778
0315
Supersedes
0814

TECHNICAL DATA SHEET
MIGHTY-MATE SERIES
Cast Iron Models 53, 57 and Bronze Models 55, 59
Submersible Effluent / Dewatering Pumps

PRODUCT SPECIFICATIONS

MOTOR	Horse Power	3/10
	Voltage	115 or 230
	Phase	1 Ph
	Hertz	60 Hz
	RPM	1550
	Type	Shaded pole
	Insulation	Class B
	Amps	4.8 - 9.7
PUMP	Operation	Automatic or nonautomatic
	Auto On/Off Points	7-1/4" (18.4 cm) / 3" (7.6 cm)
	Discharge Size	1-1/2" NPT
	Solids Handling	1/2" (12 mm) spherical solids
	Cord Length	9' (3 m) automatic, 15' (5 m) nonautomatic
	Cord Type	UL listed, 3-wire, grounded plug
	Max. Head	19.25' (5.9 m)
	Max. Flow Rate	43 GPM (163 LPM)
	Max. Operating Temp.	130° F (54° C)
	Cooling	Oil filled
	Motor Protection	Auto reset thermal overload
MATERIALS	Cap	Cast iron or bronze
	Motor Housing	Cast iron or bronze
	Pump Housing	Cast iron or bronze
	Base	Cast iron, bronze or engineered thermoplastic
	Upper Bearing	Sleeve bearing
	Lower Bearing	Sleeve bearing
	Mechanical Seals	Carbon and ceramic
	Impeller Type	Non-clogging vortex
	Impeller	Plastic, cast iron or bronze
	Hardware	Stainless steel
	Motor Shaft	AISI 1215 cold rolled steel
	Gasket	Neoprene

NOTE: See model comparison chart for specific details.

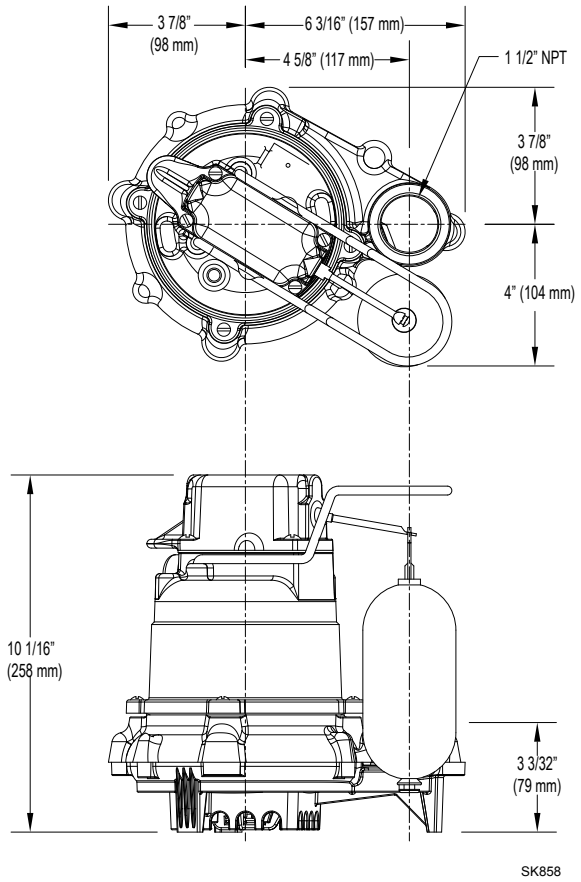

Tested to Standard UL778 and Certified to CSA Standard C22.2 No. 108

© Copyright 2015 Zoeller® Co. All rights reserved.
502-778-2731 | 800-928-7867 | 3649 Cane Run Road | Louisville, KY 40211-1961 | www.zoeller.com

TOTAL DYNAMIC HEAD FLOW PER MINUTE

MODEL		53/55/57/59	
Feet	Meters	Gal.	Liters
5	1.5	43	163
10	3.0	34	129
15	4.6	19	72
Shut-off Head:		19.25 ft.(5.9m)	

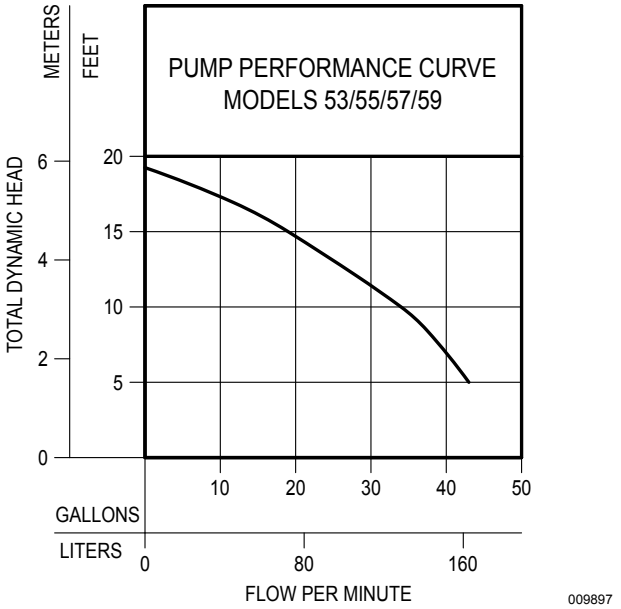

Model	MODEL COMPARISON											CERTIFICATIONS
	Seal	Mode	Volts	Ph	Amps	HP	Hz	Lbs	Kg	Simplex	Duplex	cCSAus
M53/M55	Single	Auto	115	1	9.7	3/10	60	23	10	1	---	Y
N53/N55	Single	Non	115	1	9.7	3/10	60	23	10	2	3 & 4	Y
* BN53	Single	Auto	115	1	9.7	3/10	60	25	11	*	---	Y
* BE53/BE57	Single	Auto	230	1	4.8	3/10	60	24 / 30	11 / 13	*	---	Y
D53	Single	Auto	230	1	4.8	3/10	60	23	10	1	---	Y
E53/E55	Single	Non	230	1	4.8	3/10	60	22	10	2	3 & 4	Y
M57/M59	Single	Auto	115	1	9.7	3/10	60	29 / 33	13 / 15	1	---	Y
N57/N59	Single	Non	115	1	9.7	3/10	60	28 / 29	12 / 13	2	3 & 4	Y
* BN57	Single	Auto	115	1	9.7	3/10	60	30	13	*	---	N
D57/D59	Single	Auto	230	1	4.8	3/10	60	30 / 33	13 / 15	1	---	Y
E57/E59	Single	Non	230	1	4.8	3/10	60	28 / 29	12 / 13	2	3 & 4	Y
E59	Single	Non	230	1	4.8	3/10	60	29	13	2	3 & 4	Y

* Single piggyback switch included.

SPECIAL MODEL FEATURES

Additional cord lengths are available in 15' (5 m), 25' (8 m) and 35' (11 m). 50' (15 m) cord lengths available for 230 V units only.

BE and BN models include a piggyback variable level pump switch.

Model 53: cast iron switch case, motor and pump housing, a plastic impeller and base. Model 57: all cast iron construction with a cast iron impeller. Model 55: bronze switch case, motor and pump housing, a plastic impeller and base. Model 59: bronze construction with a bronze impeller.

Optional pump stand (P/N 10-2421).

SELECTION GUIDE

1. Integral float-operated mechanical switch, no external control required.
2. Single piggyback variable level float switch or double piggyback variable level float switch. Refer to FM0477.
3. See FM0712 for correct model of Electrical Alternator.
4. Variable level control switch 10-0743 used as a control activator with electrical alternator (3) or (4) float system.

OPTIONAL PUMP STAND P/N 10-2421

- Reduces potential clogging by debris
- Replaces rocks or bricks under the pump
- Made of durable, noncorrosive ABS
- Raises pump 2" (5 cm) off bottom of basin
- Provides the ability to raise intake by adding sections of 1½" or 2" (DN40 or DN50) PVC piping
- Attaches securely to pump
- Accommodates sump, dewatering and effluent applications

NOTE: Make sure float is free from obstruction.

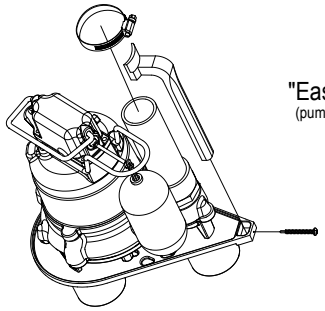

"Easy assembly"
(pump & discharge pipe not included.)

⚠ CAUTION All installation of controls, protection devices and wiring should be done by a qualified licensed electrician. All electrical and safety codes should be followed including the most recent National Electrical Code (NEC) and the Occupational Safety and Health Act (OSHA).

© Copyright 2015 Zoeller® Co. All rights reserved.

502-778-2731 | 800-928-7867 | 3649 Cane Run Road | Louisville, KY 40211-1961 | www.zoeller.com