Your Peace of Mind is Our Top Priority®

Product information presented here reflects conditions at time of publication. Consult factory regarding discrepancies or inconsistencies.

ZOELLER®
PUMP COMPANY
Zoeller Family of Water Solutions™

MAIL TO: P.O. BOX 16347 • Louisville, KY 40256-0347
SHIP TO: 3649 Cane Run Road • Louisville, KY 40211-1961
(502) 778-2731 • 1 (800) 928-PUMP • FAX (502) 774-3624

SECTION: 6.10.355
FM1488
0614
Supersedes
0803

visit our web site:
www.zoeller.com

REPLACEMENT PARTS LIST FOR MODELS:

E4290 NONAUTOMATIC/DOUBLE SEAL 230V/1PH
I4290 NONAUTOMATIC/DOUBLE SEAL 200V/1PH
F4290 NONAUTOMATIC/DOUBLE SEAL 230V/3PH
G4290 NONAUTOMATIC/DOUBLE SEAL 460V/3PH
J4290 NONAUTOMATIC/DOUBLE SEAL 200V/3PH
BA4290 NONAUTOMATIC/DOUBLE SEAL 575V/3PH

Consult factory for all other models

TO ORDER REPLACEMENT PARTS:

PLEASE FURNISH THE FOLLOWING INFORMATION:

- Model Number.
- Part Number of Pump.
- Part Number and Description of part.

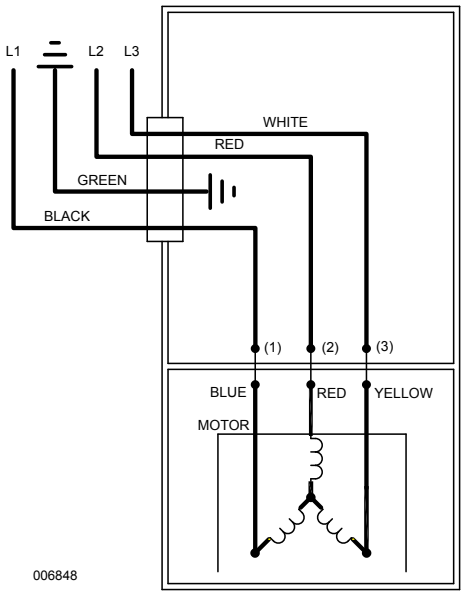

WIRING DIAGRAM FOR MODELS
"F4290A thru C", "G4290A thru C",
"J4290A thru C" & "BA4290A thru C" All Revisions
3/96 thru Current

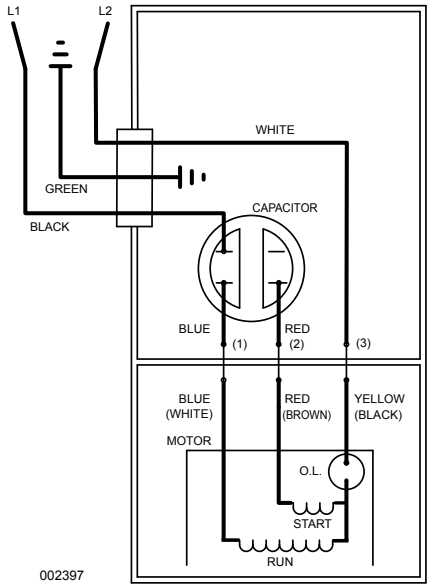

WIRING DIAGRAM FOR MODELS
"E4290A thru C" & "I4290A thru D" All Revisions
3/96 thru Current

© Copyright 2014 Zoeller Co. All rights reserved.

REPLACEMENT PARTS LIST FOR MODEL “E4290”.

See back page for illustration.

				MODELS:	E4290-A	E4290-B	E4290-C
REF NO.		DESCRIPTION	QTY	NOTES	5/96 thru 6/01	7/01 thru 7/09	8/09 thru Current
1	•	Handle	1		217069	217069	217069
2		Cover & Cordage 16/3	1	5	011063	011063	011063
3	•	Cover-Mach & Handle Asm	1	5	011058	011058	011058
4	•	Gasket, Case/Cover	1		001011	001011	001011
5		Wire Pkg (2) Wires	1		011062	011062	011062
6		Capacitor & Clamp Asm 20uF	1		002381	002381	002381
7		Housing, Mtr-&Stator	1	1,3	002382	002382	019655
8		Bearing, Sleeve-Bronze	1		001012	001012	N/A
	•	Bearing, Radial			N/A	N/A	006703
9		Cordage, Terminal & Seal 50'	1	5	011059	011059	011059
10		Cordage, Terminal & Seal 50' Sensor	N/A		N/A	N/A	N/A
11		Seal, Cord Assembly & Strain Relief	1		011065	011065	011065
12	•	Plug, Test	3		034090	034090	034090
13	•	Seal, Thru Wall Terminal	3		003402	003402	003402
14		Rotor & Brg Asm	1		011061	011061	152402
15		Washer, Seal Locating & Snap Ring	1		011057	011057	011057
16	•	Bearing, 7303	1		009861	009861	009861
17	•	Seal, Mtr Hsg	2		001014	001014	001014
18	•	Oil, Dielectric	1		011066	011066	014118
19		Adapter-Mach. Upper	1		008862	008862	008862
20	•	Seal, Shaft-Upper	1	6	002430	014675	014675
	•	Seal, Shaft-Lower	1	7	002430	010992	010992
21		Adapter-Mach. Lower	1		008833	008833	008833
22		Impeller	1		011097	011097	011097
23		Flange Pkg 2" NPT	1		10-1305	10-1305	10-1305
		Flange Pkg 3" NPT	1		10-1306	10-1306	10-1306
24		Housing, Pump-Mach.	1		009349	009349	009349
25	•	Screw, #6-32 X. .25RHM SL Tc Stlgr	3		001877	001877	001877
26	•	Screw, .25-20 X .75 HHm-SS	4		001916	001916	001916
27	•	Screw, .24-20 X 1 HHm-SS	4		007790	007790	007790
28	•	Screw, .5-13 X 2 HH Cap-SS	2		001909	001909	001909
29	•	Washer, SS 1.25Od X .562 Id X .078	2		002115	002115	002115
30	•	Screw, .313-18 X 1 HH Cap-SS	8		002608	002608	002608
31		Wire Asm - Mst Sensor	N/A		N/A	N/A	N/A
32	•	Seal, Sensor Cd Asm & Strain Relief	N/A		N/A	N/A	N/A
33		Spring, Bearing Preload	1		N/A	N/A	017192
34	•	Nut, Acorn	N/A		N/A	N/A	N/A
¤		Rebuild Kit			011096	011096	019709

• Items included in Rebuild Kit. ¤ Not Shown in Illustration.

NOTES:

1) Motor housing, bearing, stator & term. (Item 7) is preassembled at the factory and must be replaced as a unit. Stator is permanently attached to the motor housing. Plug (Item 12); seal thru wall term. (Item 13) and bearing-upper (Item 8) are replaceable.
2) “NA” indicates not applicable.
3) When ordering specify either General Electric or Emerson Motor.
4) See FM0160 parts price sheet for listing of parts prices.
5) Consult factory for pumps date coded prior to 5/96.
6) Shaft seal in Rev. A pumps may be replaced with Carbon - Silicon Carbide seal. Order part number from Rev. B column if customer desires this upgrade.
7) Shaft seal in Rev. A pumps may be replaced with Silicon Carbide - Silicon Carbide seal. Order part number from Rev. B column if customer desires this upgrade.

© Copyright 2014 Zoeller Co. All rights reserved.

REPLACEMENT PARTS LIST FOR MODEL “I4290”.

See back page for illustration.

				MODELS:	I4290-A	I4290-B	I4290-C	I4290-D
REF NO.		DESCRIPTION	QTY	NOTES	5/96 thru 6/01	7/01 thru 4/03	5/03 thru 7/09	8/09 thru Current
1	•	Handle	1		217069	217069	217069	217069
2		Cover & Cordage	1	5	011068	011068	016106	016106
3		Cover-Mach. & Handle Asm	1	5	011067	011067	016104	016104
4	•	Gasket, Case/Cover	1		001011	001011	001011	001011
5		Wire Pkg (2) Wires	1		011062	011062	011062	011062
6		Capacitor & Clamp Asm	1		002381	002381	002381	002381
7		Housing, Mtr.-& Stator	1	1,3	005529	005529	005529	019654
8		Bearing, Sleeve-Bronze	1		001012	001012	001012	N/A
	•	Bearing, Radial	1		N/A	N/A	N/A	006703
9		Cordage, Term & Seal	1		011069	011069	016110	016110
10		Cordage, Terminal & Seal 50' Sensor	N/A		N/A	N/A	N/A	N/A
11	•	Seal, Cord-Asm & Strain Relief	1		004375	004375	015634	015634
12	•	Plug, Test	3		034090	034090	034090	034090
13	•	Seal, Thru Wall Terminal	3		003402	003402	003402	003402
14		Rotor & Brg Asm	1		011061	011061	011061	152402
15		Washer, Seal Locating & Snap Ring	1		011057	011057	011057	011057
16	•	Bearing, 7303	1		009861	009861	009861	009861
17	•	Seal, Mtr Hsg	2		001014	001014	001014	001014
18	•	Oil, Dielectric	1		011066	011066	011066	014118
19		Adapter-Mach. Upper	1		008862	008862	008862	008862
20	•	Seal, Shaft-Upper	1	6	002430	014675	014675	014675
	•	Seal, Shaft-Lower	1	7	002430	010992	010992	010992
21		Adapter-Mach. Lower	1		008833	008833	008833	008833
22		Impeller	1		011097	011097	011097	011097
23		Flange Pkg 2" NPT	1		10-1305	10-1305	10-1305	10-1305
		Flange Pkg 3" NPT	1		10-1306	10-1306	10-1306	10-1306
24		Housing, Pump-Mach.	1		009349	009349	009349	009349
25	•	Screw, #6-32 X. .25RHM SL Tc Stlgr	3		001877	001877	001877	001877
26	•	Screw, .25-20 X .75 HHm-SS	4		001916	001916	001916	001916
27	•	Screw, .24-20 X 1 HHm-SS	4		007790	007790	007790	007790
28	•	Screw, .5-13 X 2 HH Cap-SS	2		001909	001909	001909	001909
29	•	Washer, SS 1.25Od X .562 Id X .078	2		002115	002115	002115	002115
30	•	Screw, .313-18 X 1 HH Cap-SS	8		002608	002608	002608	002608
31		Wire Asm - Mst Sensor	N/A		N/A	N/A	N/A	N/A
32	•	Seal, Sensor Cd Asm & Strain Relief	N/A		N/A	N/A	N/A	N/A
33		Spring, Bearing Preload	1		N/A	N/A	N/A	017192
34	•	Nut, Acorn	N/A		N/A	N/A	N/A	N/A
¤		Rebuild Kit			011095	011095	016244	019709

• Items included in Rebuild Kit. ¤ Not Shown in Illustration.

NOTES:

1) Motor housing, bearing, stator & term. (Item 7) is preassembled at the factory and must be replaced as a unit. Stator is permanently attached to the motor housing. Plug (Item 12); seal thru wall term. (Item 13) and bearing-upper (Item 8) are replaceable.
2) “NA” indicates not applicable.
3) When ordering specify either General Electric or Emerson Motor.
4) See FM0160 parts price sheet for listing of parts prices.
5) Consult factory for pumps date coded prior to 5/96.
6) Shaft seal in Rev. A pumps may be replaced with Carbon - Silicon Carbide seal. Order part number from Rev. B column if customer desires this upgrade.
7) Shaft seal in Rev. A pumps may be replaced with Silicon Carbide - Silicon Carbide seal. Order part number from Rev. B column if customer desires this upgrade.

© Copyright 2014 Zoeller Co. All rights reserved.

REPLACEMENT PARTS LIST FOR MODEL “BA4290”.

See back page for illustration.

				MODELS:	BA4290-A	BA4290-B	BA4290-C
REF NO.		DESCRIPTION	QTY	NOTES	5/96 thru 6/01	7/01 thru 7/09	8/09 thru Current
1	•	Handle	1		217069	217069	217069
2		Cover & Cordage 16/4	1	5	011072	011072	011072
3	•	Cover-Mach & Handle Asm	1	5	011058	011058	011058
4	•	Gasket, Case/Cover	1		001011	001011	001011
5		Wire Pkg (2) Wires	1		N/A	N/A	N/A
6		Capacitor & Clamp Asm 20uF	1		N/A	N/A	N/A
7		Housing, Mtr-&Stator	1	1,3	006287	006287	019659
8		Bearing, Sleeve-Bronze	1		001012	001012	N/A
	•	Bearing, Radial			N/A	N/A	006703
9		Cordage, Terminal & Seal 50'	1	5	011070	011070	011070
10		Cordage, Terminal & Seal 50' Sensor	N/A		N/A	N/A	N/A
11		Seal, Cord Assembly & Strain Relief	1		011071	011071	011071
12	•	Plug, Test	3		034090	034090	034090
13	•	Seal, Thru Wall Terminal	3		003402	003402	003402
14		Rotor & Brg Asm	1		012675	012675	152403
15		Washer, Seal Locating & Snap Ring	1		011057	011057	011057
16	•	Bearing, 7303	1		009861	009861	009861
17	•	Seal, Mtr Hsg	2		001014	001014	001014
18	•	Oil, Dielectric	1		011066	011066	014118
19		Adapter-Mach. Upper	1		008862	008862	008862
20	•	Seal, Shaft-Upper	1	6	002430	014675	014675
	•	Seal, Shaft-Lower	1	7	002430	010992	010992
21		Adapter-Mach. Lower	1		008833	008833	008833
22		Impeller	1		011074	011074	011074
23		Flange Pkg 2" NPT	1		10-1305	10-1305	10-1305
		Flange Pkg 3" NPT	1		10-1306	10-1306	10-1306
24		Housing, Pump-Mach.	1		009349	009349	009349
25	•	Screw, #6-32 X. .25RHM SL Tc Stlgr	3		001877	001877	001877
26	•	Screw, .25-20 X .75 HHm-SS	4		001916	001916	001916
27	•	Screw, .24-20 X 1 HHm-SS	4		007790	007790	007790
28	•	Screw, .5-13 X 2 HH Cap-SS	2		001909	001909	001909
29	•	Washer, SS 1.25Od X .562 Id X .078	2		002115	002115	002115
30	•	Screw, .313-18 X 1 HH Cap-SS	8		002608	002608	002608
31		Wire Asm - Mst Sensor	N/A		N/A	N/A	N/A
32	•	Seal, Sensor Cd Asm & Strain Relief	N/A		N/A	N/A	N/A
33		Spring, Bearing Preload	1		N/A	N/A	017192
34	•	Nut, Acorn	1		004351	004351	004351
¤		Rebuild Kit			011093	011093	019709

• Items included in Rebuild Kit. ¤ Not Shown in Illustration.

NOTES:

1) Motor housing, bearing, stator & term. (Item 7) is preassembled at the factory and must be replaced as a unit. Stator is permanently attached to the motor housing. Plug (Item 12); seal thru wall term. (Item 13) and bearing-upper (Item 8) are replaceable.
2) “NA” indicates not applicable.
3) When ordering specify either General Electric or Emerson Motor.
4) See FM0160 parts price sheet for listing of parts prices.
5) Consult factory for pumps date coded prior to 5/96.
6) Shaft seal in Rev. A pumps may be replaced with Carbon - Silicon Carbide seal. Order part number from Rev. B column if customer desires this upgrade.
7) Shaft seal in Rev. A pumps may be replaced with Silicon Carbide - Silicon Carbide seal. Order part number from Rev. B column if customer desires this upgrade.

© Copyright 2014 Zoeller Co. All rights reserved.

REPLACEMENT PARTS LIST FOR MODEL “F4290”.

See back page for illustration.

				MODELS:	F4290-A	F4290-B	F4290-C
REF NO.		DESCRIPTION	QTY	NOTES	5/96 thru 6/01	7/01 thru 7/09	8/09 thru Current
1	•	Handle	1		217069	217069	217069
2		Cover & Cordage	1	5	011072	011072	011072
3	•	Cover-Mach & Handle Asm	1	5	011058	011058	011058
4	•	Gasket, Case/Cover	1		001011	001011	001011
5		Wire Pkg (2) Wires	1		N/A	N/A	N/A
6		Capacitor & Clamp Asm 20uF	1		N/A	N/A	N/A
7		Housing, Mtr-&Stator	1	1,3	005472	005472	019657
8		Bearing, Sleeve-Bronze	1		001012	001012	N/A
	•	Bearing, Radial			N/A	N/A	006703
9		Cordage, Terminal & Seal 50'	1	5	011070	011070	011070
10		Cordage, Terminal & Seal 50' Sensor	N/A		N/A	N/A	N/A
11		Seal, Cord Assembly & Strain Relief	1		011071	011071	011071
12	•	Plug, Test	3		034090	034090	034090
13	•	Seal, Thru Wall Terminal	3		003402	003402	003402
14		Rotor & Brg Asm	1		012675	012675	152403
15		Washer, Seal Locating & Snap Ring	1		011057	011057	011057
16	•	Bearing, 7303	1		009861	009861	009861
17	•	Seal, Mtr Hsg	2		001014	001014	001014
18	•	Oil, Dielectric	1		011066	011066	014118
19		Adapter-Mach. Upper	1		008862	008862	008862
20	•	Seal, Shaft-Upper	1	6	002430	014675	014675
	•	Seal, Shaft-Lower	1	7	002430	010992	010992
21		Adapter-Mach. Lower	1		008833	008833	008833
22		Impeller	1		011074	011074	011074
23		Flange Pkg 2" NPT	1		10-1305	10-1305	10-1305
		Flange Pkg 3" NPT	1		10-1306	10-1306	10-1306
24		Housing, Pump-Mach.	1		009349	009349	009349
25	•	Screw, #6-32 X. .25RHM SL Tc Stlgr	3		001877	001877	001877
26	•	Screw, .25-20 X .75 HHm-SS	4		001916	001916	001916
27	•	Screw, .24-20 X 1 HHm-SS	4		007790	007790	007790
28	•	Screw, .5-13 X 2 HH Cap-SS	2		001909	001909	001909
29	•	Washer, SS 1.25Od X .562 Id X .078	2		002115	002115	002115
30	•	Screw, .313-18 X 1 HH Cap-SS	8		002608	002608	002608
31		Wire Asm - Mst Sensor	N/A		N/A	N/A	N/A
32	•	Seal, Sensor Cd Asm & Strain Relief	N/A		N/A	N/A	N/A
33		Spring, Bearing Preload	1		N/A	N/A	017192
34	•	Nut, Acorn	1		004351	004351	004351
¤		Rebuild Kit			011093	011093	019709

• Items included in Rebuild Kit. ¤ Not Shown in Illustration.

NOTES:

1) Motor housing, bearing, stator & term. (Item 7) is preassembled at the factory and must be replaced as a unit. Stator is permanently attached to the motor housing. Plug (Item 12); seal thru wall term. (Item 13) and bearing-upper (Item 8) are replaceable.
2) “NA” indicates not applicable.
3) When ordering specify either General Electric or Emerson Motor.
4) See FM0160 parts price sheet for listing of parts prices.
5) Consult factory for pumps date coded prior to 5/96.
6) Shaft seal in Rev. A pumps may be replaced with Carbon - Silicon Carbide seal. Order part number from Rev. B column if customer desires this upgrade.
7) Shaft seal in Rev. A pumps may be replaced with Silicon Carbide - Silicon Carbide seal. Order part number from Rev. B column if customer desires this upgrade.

© Copyright 2014 Zoeller Co. All rights reserved.

REPLACEMENT PARTS LIST FOR MODELS“G4290”.

See back page for illustration.

				MODELS:	G4290-A	G4290-B	G4290-C
REF NO.		DESCRIPTION	QTY	NOTES	5/96 thru 6/01	7/01 thru 7/09	8/09 thru Current
1	•	Handle	1		217069	217069	217069
2		Cover & Cordage 16/4	1	5	011072	011072	011072
3	•	Cover-Mach & Handle Asm	1	5	011058	011058	011058
4	•	Gasket, Case/Cover	1		001011	001011	001011
5		Wire Pkg (2) Wires	1		N/A	N/A	N/A
6		Capacitor & Clamp Asm 20uF	1		N/A	N/A	N/A
7		Housing, Mtr-&Stator	1	1,3	003770	003770	019658
8		Bearing, Sleeve-Bronze	1		001012	001012	N/A
	•	Bearing, Radial			N/A	N/A	006703
9		Cordage, Terminal & Seal 50'	1	5	011070	011070	011070
10		Cordage, Terminal & Seal 50' Sensor	N/A		N/A	N/A	N/A
11		Seal, Cord Assembly & Strain Relief	1		011071	011071	011071
12	•	Plug, Test	3		034090	034090	034090
13	•	Seal, Thru Wall Terminal	3		003402	003402	003402
14		Rotor & Brg Asm	1		012675	012675	152403
15		Washer, Seal Locating & Snap Ring	1		011057	011057	011057
16	•	Bearing, 7303	1		009861	009861	009861
17	•	Seal, Mtr Hsg	2		001014	001014	001014
18	•	Oil, Dielectric	1		011066	011066	014118
19		Adapter-Mach. Upper	1		008862	008862	008862
20	•	Seal, Shaft-Upper	1	6	002430	014675	014675
	•	Seal, Shaft-Lower	1	7	002430	010992	010992
21		Adapter-Mach. Lower	1		008833	008833	008833
22		Impeller	1		011074	011074	011074
23		Flange Pkg 2" NPT	1		10-1305	10-1305	10-1305
		Flange Pkg 3" NPT	1		10-1306	10-1306	10-1306
24		Housing, Pump-Mach.	1		009349	009349	009349
25	•	Screw, #6-32 X. .25RHM SL Tc Stlgr	3		001877	001877	001877
26	•	Screw, .25-20 X .75 HHm-SS	4		001916	001916	001916
27	•	Screw, .24-20 X 1 HHm-SS	4		007790	007790	007790
28	•	Screw, .5-13 X 2 HH Cap-SS	2		001909	001909	001909
29	•	Washer, SS 1.25Od X .562 Id X .078	2		002115	002115	002115
30	•	Screw, .313-18 X 1 HH Cap-SS	8		002608	002608	002608
31		Wire Asm - Mst Sensor	N/A		N/A	N/A	N/A
32	•	Seal, Sensor Cd Asm & Strain Relief	N/A		N/A	N/A	N/A
33		Spring, Bearing Preload	1		N/A	N/A	017192
34	•	Nut, Acorn	1		004351	004351	004351
¤		Rebuild Kit			011093	011093	019709

• Items included in Rebuild Kit. ¤ Not Shown in Illustration.

NOTES:

1) Motor housing, bearing, stator & term. (Item 7) is preassembled at the factory and must be replaced as a unit. Stator is permanently attached to the motor housing. Plug (Item 12); seal thru wall term. (Item 13) and bearing-upper (Item 8) are replaceable.
2) “NA” indicates not applicable.
3) When ordering specify either General Electric or Emerson Motor.
4) See FM0160 parts price sheet for listing of parts prices.
5) Consult factory for pumps date coded prior to 5/96.
6) Shaft seal in Rev. A pumps may be replaced with Carbon - Silicon Carbide seal. Order part number from Rev. B column if customer desires this upgrade.
7) Shaft seal in Rev. A pumps may be replaced with Silicon Carbide - Silicon Carbide seal. Order part number from Rev. B column if customer desires this upgrade.

© Copyright 2014 Zoeller Co. All rights reserved.

REPLACEMENT PARTS LIST FOR MODEL “J4290”.

See back page for illustration.

				MODELS:	J4290-A	J4290-B	J4290-C
REF NO.		DESCRIPTION	QTY	NOTES	5/96 thru 6/01	7/01 thru 7/09	8/09 thru Current
1	•	Handle	1		217069	217069	217069
2		Cover & Cordage	1	5	011072	011072	011072
3	•	Cover-Mach & Handle Asm	1	5	011058	011058	011058
4	•	Gasket, Case/Cover	1		001011	001011	001011
5		Wire Pkg (2) Wires	1		N/A	N/A	N/A
6		Capacitor & Clamp Asm 20uF	1		N/A	N/A	N/A
7		Housing, Mtr-&Stator	1	1,3	004443	004443	019656
8		Bearing, Sleeve-Bronze	1		001012	001012	N/A
	•	Bearing, Radial			N/A	N/A	006703
9		Cordage, Terminal & Seal 50'	1	5	011070	011070	011070
10		Cordage, Terminal & Seal 50' Sensor	N/A		N/A	N/A	N/A
11		Seal, Cord Assembly & Strain Relief	1		011071	011071	011071
12	•	Plug, Test	3		034090	034090	034090
13	•	Seal, Thru Wall Terminal	3		003402	003402	003402
14		Rotor & Brg Asm	1		012675	012675	152403
15		Washer, Seal Locating & Snap Ring	1		011057	011057	011057
16	•	Bearing, 7303	1		009861	009861	009861
17	•	Seal, Mtr Hsg	2		001014	001014	001014
18	•	Oil, Dielectric	1		011066	011066	014118
19		Adapter-Mach. Upper	1		008862	008862	008862
20	•	Seal, Shaft-Upper	1	6	002430	014675	014675
	•	Seal, Shaft-Lower	1	7	002430	010992	010992
21		Adapter-Mach. Lower	1		008833	008833	008833
22		Impeller	1		011074	011074	011074
23		Flange Pkg 2" NPT	1		10-1305	10-1305	10-1305
		Flange Pkg 3" NPT	1		10-1306	10-1306	10-1306
24		Housing, Pump-Mach.	1		009349	009349	009349
25	•	Screw, #6-32 X. .25RHM SL Tc Stlgr	3		001877	001877	001877
26	•	Screw, .25-20 X .75 HHm-SS	4		001916	001916	001916
27	•	Screw, .24-20 X 1 HHm-SS	4		007790	007790	007790
28	•	Screw, .5-13 X 2 HH Cap-SS	2		001909	001909	001909
29	•	Washer, SS 1.25Od X .562 Id X .078	2		002115	002115	002115
30	•	Screw, .313-18 X 1 HH Cap-SS	8		002608	002608	002608
31		Wire Asm - Mst Sensor	N/A		N/A	N/A	N/A
32	•	Seal, Sensor Cd Asm & Strain Relief	N/A		N/A	N/A	N/A
33		Spring, Bearing Preload	1		N/A	N/A	017192
34	•	Nut, Acorn	1		004351	004351	004351
¤		Rebuild Kit			011093	011093	019709

• Items included in Rebuild Kit. ¤ Not Shown in Illustration.

NOTES:

1) Motor housing, bearing, stator & term. (Item 7) is preassembled at the factory and must be replaced as a unit. Stator is permanently attached to the motor housing. Plug (Item 12); seal thru wall term. (Item 13) and bearing-upper (Item 8) are replaceable.
2) “NA” indicates not applicable.
3) When ordering specify either General Electric or Emerson Motor.
4) See FM0160 parts price sheet for listing of parts prices.
5) Consult factory for pumps date coded prior to 5/96.
6) Shaft seal in Rev. A pumps may be replaced with Carbon - Silicon Carbide seal. Order part number from Rev. B column if customer desires this upgrade.
7) Shaft seal in Rev. A pumps may be replaced with Silicon Carbide - Silicon Carbide seal. Order part number from Rev. B column if customer desires this upgrade.

© Copyright 2014 Zoeller Co. All rights reserved.

REPLACEMENT PARTS ILLUSTRATION FOR ALL 4290 MODELS

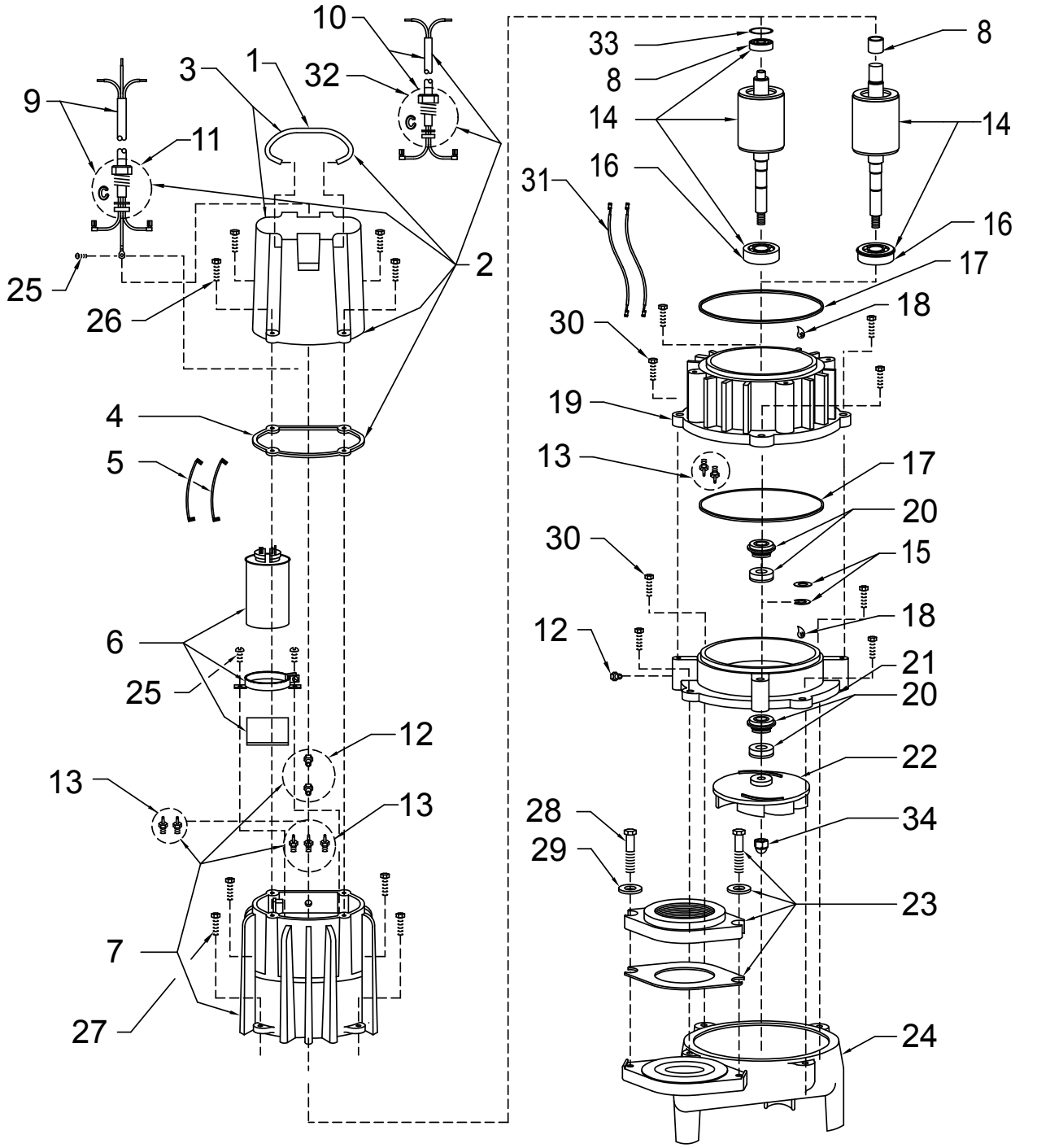

ZOELLER® PUMP COMPANY

MAIL TO: P.O. BOX 16347 • Louisville, KY 40256-0347
SHIP TO: 3649 Cane Run Road • Louisville, KY 40211-1961
(502) 778-2731 • 1 (800) 928-PUMP • FAX (502) 774-3624

Your Peace of Mind is Our Top Priority®

visit our web site: www.zoeller.com

© Copyright 2014 Zoeller Co. All rights reserved.