NOTICE TO INSTALLER: Instructions must remain with installation.

Your Peace of Mind is Our Top Priority®

FM2834
1015
Supersedes
0515

Product information presented here reflects conditions at time of publication. Consult factory regarding discrepancies or inconsistencies.

Register your Zoeller Pump Company Product on our website: http://reg.zoellerpumps.com/

Patent No. D740329

ZOELLER®

PUMP COMPANY

Zoeller Family of Water Solutions™

MAIL TO: *P.O. BOX 16347 • Louisville, KY 40256-0347*
SHIP TO: *3649 Cane Run Road • Louisville, KY 40211-1961*
(502) 778-2731 • 1 (800) 928-PUMP • FAX (502) 774-3624

visit our web site: www.zoeller.com

DATE INSTALLED:
MODEL NUMBER:

ProPak 508/53 508/98

PREASSEMBLED SUMP PUMP SYSTEM WITH BATTERY BACKUP
MODEL 508 - 12V DC BATTERY BACKUP SYSTEM
WITH 115V AC POWERED SUMP PUMP
MODEL M53 or M98

NOTICE: VENT HOLE FOR CHECK VALVE SEE #2 IN CAUTION SECTION BELOW

INSTALLATION INSTRUCTIONS

⚠ WARNING

SEE BELOW FOR LIST OF WARNINGS

1. Make certain that the receptacle is within the reach of the pump's power supply cord. Do not use primary pump circuit. DO NOT USE AN EXTENSION CORD. Extension cords that are too long or too light do not deliver sufficient voltage to the pump motor. But, more important, they could present a safety hazard if the insulation were to become damaged or the connection end were to fall into the sump.
2. Make sure the pump electrical supply circuit is equipped with fuses or circuit breakers of proper capacity. A separate branch circuit is recommended, sized according to the "National Electrical Code" for the current shown on the pump nameplate.
3. Testing for ground. As a safety measure, each electrical outlet should be checked for ground using an Underwriters Laboratory Listed circuit analyzer which will indicate if the power, neutral and ground wires are correctly connected to your outlet. If they are not, call a qualified licensed electrician.
4. For Added Safety. Pumping and other equipment with a 3-prong grounded plug must be connected to a 3-prong grounded receptacle. For added safety the receptacle may be protected with a ground-fault circuit interrupter. When a pump needs to be connected in a watertight junction box, the plug can be removed and spliced to the supply cable with proper grounding. For added safety this circuit may be protected by a ground-fault circuit interrupter. The complete installation must comply with the National Electrical Code and all applicable local codes and ordinances.
5. FOR YOUR PROTECTION, ALWAYS DISCONNECT PUMP FROM ITS POWER SOURCE BEFORE HANDLING. Single phase pumps are supplied with a 3-prong grounded plug to help protect you against the possibility of electrical shock. DO NOT UNDER ANY CIRCUMSTANCES REMOVE THE GROUND PIN. The 3-prong plug must be inserted into a mating 3-prong grounded receptacle. If the installation does not have such a receptacle, it must be changed to the proper type, wired and grounded in accordance with the National Electrical Code and all applicable local codes and ordinances.
6. The tank is to be vented in accordance with local plumbing code. Pumps must be installed in accordance with the National Electrical Code and all applicable local codes and ordinances. Pumps are not to be installed in locations classified as hazardous in accordance with National Electrical Code, ANSI/NFPA 70.
7. "Risk of electrical shock" Do not remove power supply cord and strain relief or connect conduit directly to the pump.
8. Installation and servicing of electrical circuits and hardware should be performed by a qualified licensed electrician.
9. Pump installation and servicing should be performed by a qualified person.
10. Risk of electric shock - These pumps have not been investigated for use in swimming pool and marine areas.
11. According to the state of California (Prop 65), this product contains chemicals known to the state of California to cause cancer and birth defects or other reproductive harm.
12. It is the owner's responsibility to check the battery and battery connection **at least once a month**. Batteries contain acid and caution must be taken when handling.

⚠ CAUTION

SEE BELOW FOR LIST OF CAUTIONS

1. Check to be sure your power source is capable of handling the voltage requirements of the motor, as indicated on the pump name plate.
2. Information - vent hole purpose. It is necessary that all submersible sump, effluent, and sewage pumps capable of handling various sizes of solid waste be of the bottom intake design to reduce clogging and seal failures. Vent hole should be checked periodically for clogging. The 50 Series pumps have a vent located in the pump housing opposite the float, adjacent to a housing lug. Water stream will be visible from this hole during pump run periods.
3. Pump should be checked frequently for debris and/or build up which may interfere with the float "on" or "off" position. Repair and service should be performed by Zoeller Pump Company Authorized Service Station only.
4. Dewatering and effluent sump pumps are not designed for use in pits handling raw sewage.
5. Maximum operating temperature must not exceed 130ºF (54ºC).
6. Do not operate a pump in an application where the Total Dynamic Head is less than the minimum Total Dynamic Head listed on the Pump Performance Curves.
7. For indoor use only.
8. DC emergency pumps are designed for handling clear water. Do not use in septic tanks to pump effluent or sewage pits to pump sewage.
9. Repair and service of your DC backup system should be performed by an authorized service station.
10. The installation of DC automatic backup pumps requires the use of a variable level float switch for operation. It is the responsibility of the installing party, to ensure that the float switch will not hang up on the pump apparatus or pit peculiarities and is secured so the pump will turn "on" and "off". It is recommended that the pit be 18" in diameter or larger to accommodate both a primary and a DC backup pump.

NOTE: Pumps with the "UL" mark and pumps with the "US" mark are tested to UL Standard UL778. CSA Certified pumps are certified to CSA Standard C22.2 No. 108.

REFER TO WARRANTY ON PAGE 2.

© Copyright 2015 Zoeller® Co. All rights reserved.

LIMITED WARRANTY

Manufacturer warrants, to the purchaser and subsequent owner during the warranty period, every new product to be free from defects in material and workmanship under normal use and service, when properly used and maintained, for a period of three years from date of purchase by the end user. Parts that fail within the warranty period, that inspections determine to be defective in material or workmanship, will be repaired, replaced or remanufactured at Manufacturer's option, provided however, that by so doing we will not be obligated to replace an entire assembly, the entire mechanism or the complete unit. No allowance will be made for shipping charges, damages, labor or other charges that may occur due to product failure, repair or replacement.

This warranty does not apply to and there shall be no warranty for any material or product that has been disassembled without prior approval of Manufacturer, subjected to misuse, misapplication, neglect, alteration, accident or act of nature; that has not been installed, operated or maintained in accordance with Manufacturer's installation instructions; that has been exposed to outside substances including but not limited to the following: sand, gravel, cement, mud, tar, hydrocarbons, hydrocarbon derivatives (oil, gasoline, solvents, etc.), or other abrasive or corrosive substances, wash towels or feminine sanitary products, etc. in all pumping applications. The warranty set out in the paragraph above is in lieu of all other warranties expressed or implied; and we do not authorize any representative or other person to assume for us any other liability in connection with our products.

Contact Manufacturer at, 3649 Cane Run Road, Louisville, Kentucky 40211, Attention: Product Support Department to obtain any needed repair or replacement of part(s) or additional information pertaining to our warranty.

MANUFACTURER EXPRESSLY DISCLAIMS LIABILITY FOR SPECIAL, CONSEQUENTIAL OR INCIDENTAL DAMAGES OR BREACH OF EXPRESSED OR IMPLIED WARRANTY; AND ANY IMPLIED WARRANTY OF FITNESS FOR A PARTICULAR PURPOSE AND OF MERCHANTABILITY SHALL BE LIMITED TO THE DURATION OF THE EXPRESSED WARRANTY.

Some states do not allow limitations on the duration of an implied warranty, so the above limitation may not apply to you. Some states do not allow the exclusion or limitation of incidental or consequential damages, so the above limitation or exclusion may not apply to you.

This warranty gives you specific legal rights and you may also have other rights which vary from state to state.

In those instances where damages are incurred as a result of an alleged pump failure, the Homeowner must retain possession of the pump for investigation purposes.

DESCRIPTION

The DC emergency pump is designed as a backup to your primary sump pump during unexpected power outages or primary pump failure. The DC pump, electronic controls and all the parts required for installation are included except the battery which is supplied by the user. The system is designed for installation in sumps with minimum of 18" diameter and 24" deep. For 18" x 22" applications, consult factory.

BATTERY SELECTION

The DC emergency pump system requires a good quality, 12 volt battery to obtain maximum pumping time during a power outage. A deep-cycle, 12 volt, 105 amp-hour marine battery or larger is recommended and will provide approximately 6 hours of continuous pumping time in a sump pump installation with 8' of head pressure. In most installations the pump runs intermittently and the battery life is extended accordingly. Batteries with top terminals are recommended for ease of installation. These batteries contain acid and proper precaution must be taken when handling. Maximum battery size to fit inside battery box is 12½" Length x 7" Width x 9½" Height.

THE AQUANOT® BATTERY

There are millions of batteries manufactured each year, so it is impossible to guarantee consistent quality. A defective battery will never become fully charged and may damage the charging circuits of the Control. It is for this reason that Zoeller offers its own line of batteries. We offer both a Water/Acid Deep-Cycle Battery which can run the pump continuously for over 6 hours, and a Maintenance-Free AGM Battery, which will power the pump for over 5½ hours. These times are based on continuous pumping at 8' of static head. Actual times will vary depending on static head, volume of water entering the pit, and the condition of the battery.

Follow these recommendations:
- Use a B.C.I. size 27 deep-cycle battery, 175 minute reserve capacity, or larger
- Do NOT use a “maintenance-free” battery unless it is an AGM battery
- Replace your battery every 3 years
- Do not let corrosion build up on the battery terminals
- To check specific gravity, follow the instructions on a hydrometer (wet cell batteries only)
- Use of included plastic battery box is recommended to keep battery safe and clean.

PROTECT YOUR WARRANTY:
- Water level in batteries must be checked once a month (wet cell batteries only)

© Copyright 2015 Zoeller® Co. All rights reserved.

EASY DO'S & DON'TS FOR INSTALLING A SUMP PUMP

1. DO read thoroughly all installation material provided with the system.
2. DO inspect system for any visible damage caused by shipping. Contact dealer if system appears to be damaged.
3. DO clean all debris from the sump. Be sure that the pump will have a hard, flat surface beneath it. DO NOT install on sand, gravel or dirt.
4. DO be sure that the sump is large enough to allow proper clearance for the level control switch(es) to operate properly.
5. DO Always Disconnect Pump From Power Source Before Handling.
   DO always connect to a separately protected and properly grounded circuit.
   DO NOT ever cut, splice, or damage power cord (Only splice in a watertight junction box).
   DO NOT carry or lift pump by its power cord.
   DO NOT use an extension cord with a sump pump.
6. DO install a union in the discharge line.
   DO NOT use a discharge pipe smaller than the pump discharge.
7. DO NOT use a sump pump as a trench or excavation pump, or for pumping sewage, gasoline, or other hazardous liquids.
8. DO test system immediately after installation to be sure that the system is working properly.
9. DO cover sump with an adequate sump cover.
10. DO review all applicable local and national codes and verify that the installation conforms to each of them.
11. DO consult manufacturer for clarifications or questions.
12. DO inspect and test system for proper operations at least every three months.

RECOMMENDED INSTALLATION FOR ALL APPLICATIONS

1. Electrical wiring and protection must be in accordance with National Electrical Code and any other applicable state and local electrical requirements.
2. All installations require a basin cover to prevent debris from falling into the basin and to prevent accidental injury.
3. Securely tape or clamp power cord to discharge pipe, clear of the float mechanism(s).
4. Use full-size discharge pipe.
5. Basin must be in accordance with applicable codes and specifications.
6. Pump must be level and float mechanism(s) clear of sides of basin before starting pump. Float switch may be repositioned as needed.
7. Basin must be clean and free of debris after installation.
8. Gate Valve or Ball Valve to be supplied by installer and installed according to any and all codes.
9. Gas tight seals required to contain gases and odors.
10. Vent gases and odors to the atmosphere through vent pipe.
11. Install Zoeller Pump Stand (Model 10-2421) under pump to provide a settling basin.

PERFORMANCE

The DC pump performance with fully charged 12V battery

Discharge Feet of Head	5	10	15	20	22
Flow Gal. per min.	39	30	20	6	Shut-off Head

The DC controller is equipped with a 10 amp charger for maintaining the battery in a ready state and recharging the battery after use when AC power is restored. Time for recharge depends upon the amount of power consumed by the pumping cycle during the AC power interruption. The system may return to the charged LED position in a very short period of time. A completely drained battery may require up to 24 hours for full recharge.

© Copyright 2015 Zoeller® Co. All rights reserved.

TYPICAL INSTALLATION

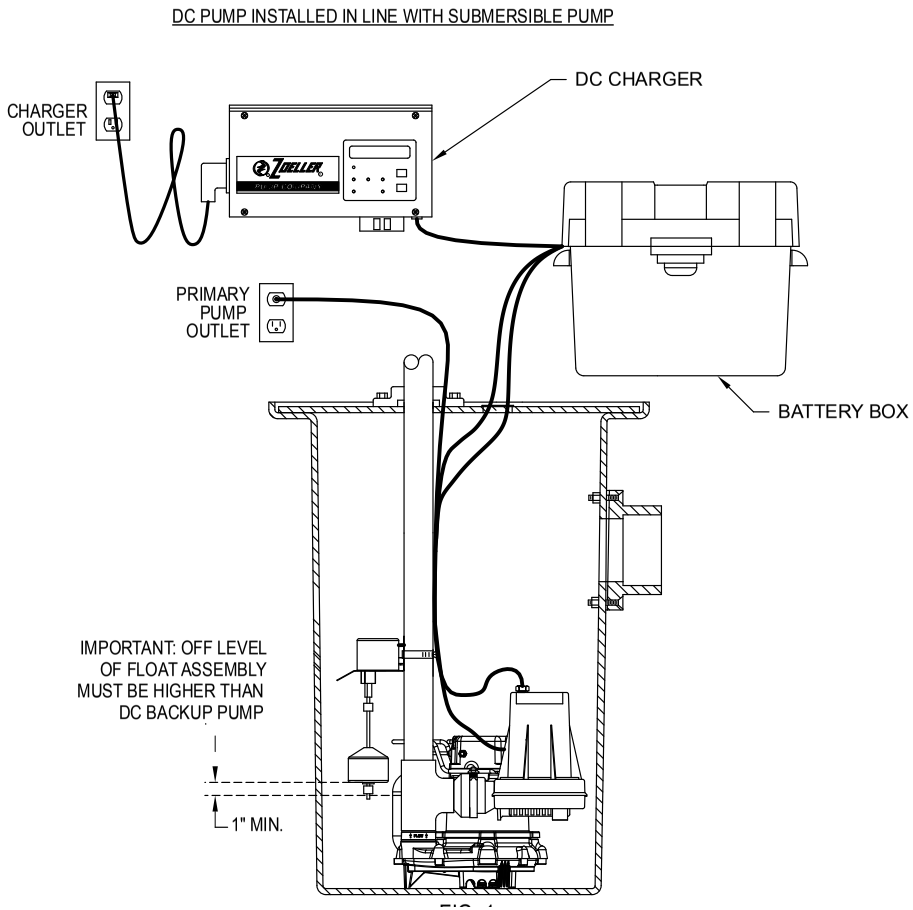

FIGURE 1

SK2959

EXPLODED VIEW OF PUMP SYSTEM

For Installation, Maintenance, Troubleshooting and Service Checklist, please refer to the corresponding Pump Installation Manual and Replacement Parts List.

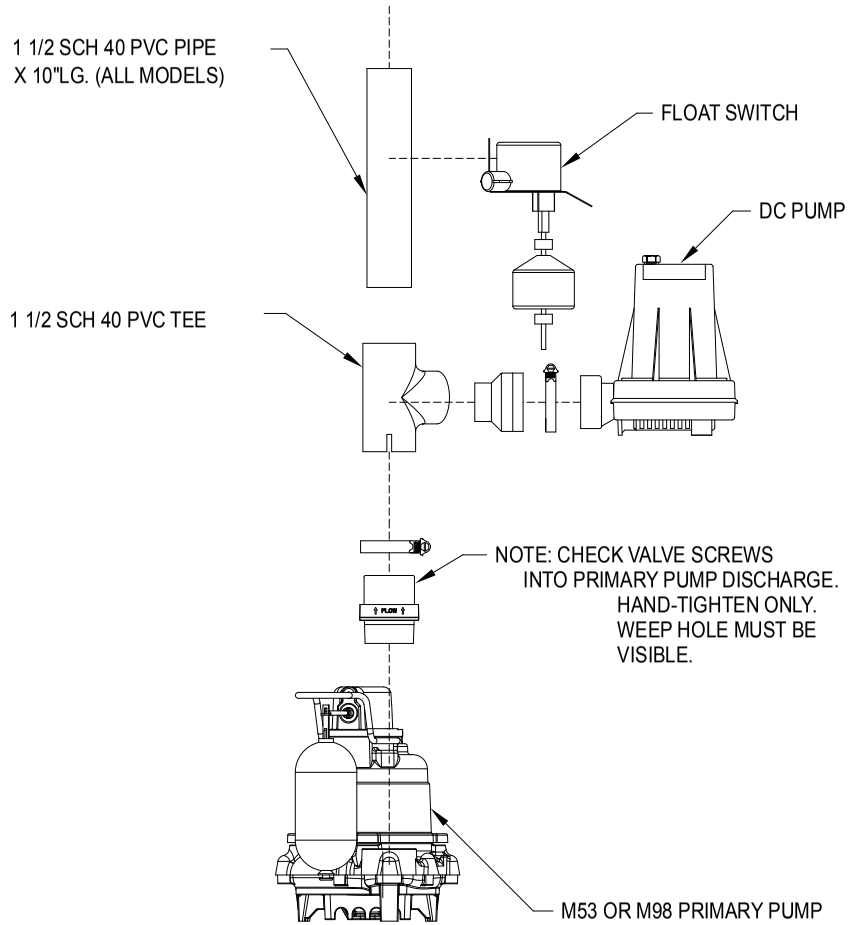

FIGURE 2

SK3011

© Copyright 2015 Zoeller® Co. All rights reserved.

INSTALLATION

1. Ensure O-ring is properly located on pump discharge. Slide DC pump into fitting and tighten the hose clamp. (See figure 2).
2. The preferred method of installation for backup pumps is shown in figure 1. The installation kit includes one check valve for installing with the backup pump discharging into the primary pump outlet pipe. An additional check valve is incorporated in the discharge of the backup pump.
3. Select location for battery and control charger. Control charger must be within 6' of a 115V wall outlet and within 6' of pump and basin. Connect to a separate circuit, different than the primary pump.
4. Make certain the float switch clamp is tight on the pipe to avoid slippage. Ensure that the "off" level of the float is 1" min. above the discharge tee of the DC backup pump (see figure 1). Position pumps in the sump and move float up and down, making sure of free movement without interference from any obstructions inside the sump or lid. Very shallow sumps may require some adjustment to avoid overfilling or backing up of water into the sump inlet. The float switch can be moved on the discharge pipe or the rubber stops can be adjusted as necessary. Cut extra float rod length below lower float stop to prevent debris from interfering with float operation (see figure 2).
5. Mount DC control charger to the wall. If more convenient, the control charger may be set on a nearby shelf or ledge. The control charger should be located 3 or 4 ft. above the sump.
6. Connect the green sensor wire to the sensor connector (figure 3).
7. Connect the leads from the control charger to the battery terminals. White pos. (+) lead to positive terminal and black neg. (-) lead to negative battery terminal. Upon proper connection, test alarm will sound. Press alarm reset to silence. This indicates proper charger to battery connection. **⚠ CAUTION** Correct battery hook up is essential for operation of the system. Use nuts supplied with battery and eyelet connectors on battery wire leads. The positive terminal is the larger stud, 3/8" diameter. The smaller stud, 5/16" diameter is the negative terminal. Apply grease to the terminals to help prevent corrosion.
8. Connect the black lead from the pump to the negative (-) battery terminal. Connect the white lead from the switch to the positive (+) battery terminal.
9. Close battery box and secure cover.
10. Plug the control power cord into the 115V wall outlet. The primary sump pump and the control charger should be on separate circuits.
11. Reconnect power to primary sump pump.
12. Optional: A dongle may be used to input a name and number into the charger for service information to the end user. Contact Customer Support for more information.
13. Optional: On the bottom of the charger there is a pair of dry contacts to signal an auxiliary device of a low battery, high water and reverse polarity alarm condition. This simple 2-wire connection is rated at a maximum of 24V AC/DC and 0.5 amps. It can be used with an auto-dialer (such as the Zoeller 10-2616), alarm or home security system. Read the auxiliary equipment's documents for further instructions.

INITIAL START-UP AND OPERATION

1. Test the installation for leaks by running water into the sump allowing for normal operation of the primary pump.
2. Check the control charger. The "red" power on light will be lit when the unit is plugged into the 115V wall outlet. The "yellow/green" light will indicate the condition of the battery.
3. Disconnect primary pump before touching any component in the sump pit.
4. Lift float switch. The DC backup pump will run and the alarm will sound after 1 or more seconds. Lower float switch immediately after alarm has started. Pump is running dry during initial check out for several seconds. **⚠ CAUTION** Continuous dry running may cause overheating and damage the pump seals. Upon release of the float switch, the pump will shut off. Press the reset button to turn the alarm off.
5. Complete the final testing of your installation by disconnecting the power to the primary pump and the control charger by removing the plugs from the 115V wall outlets. Run water into the sump until the DC backup pump is activated by the float switch. Check all connections for leaks.
6. Push alarm reset switch when pump is running. This will silence the alarm. The pump will continue to run.
7. Reconnect the control charger and your primary pump to the AC wall outlets. The primary pump should come on and lower the water level in the sump back to the normal operating level and shut off. Both primary and backup systems are now ready for use.
8. The battery charged and charging LED's will alternate during normal charging operation.

MAINTENANCE

1. Inspect and test the system for proper operations at least every 3 months.
   (a) Red power on indicator light should be "on" indicating AC power is on.
   (b) Unplug primary pump and the control charger from power supply.
   (c) Fill sump with water to the "on" level for the DC pump. Allow pump to run a few minutes.
   (d) The alarm will sound approximately 3 seconds after the pump starts to run.
   (e) Push alarm reset switch. The alarm will go "off".
   (f) Pump will shut off after water level is lowered and the float drops to the off position.
2. Plug the control charger and the primary pump into the wall outlet.
   (a) The primary pump will come on and lower the water to the normal operating level and shut off.
   (b) The "yellow" charging light should be on. The charger is replacing the energy consumed during the test. The "green" light will come on after the charger has replaced the energy consumed during the test.
3. Add distilled water to battery when necessary per battery manufacturer's instructions. **⚠ CAUTION** Battery acid is dangerous. Take proper safety precautions. Do not splash the acid.

© Copyright 2015 Zoeller® Co. All rights reserved.

EXPLODED VIEW - DC PUMP

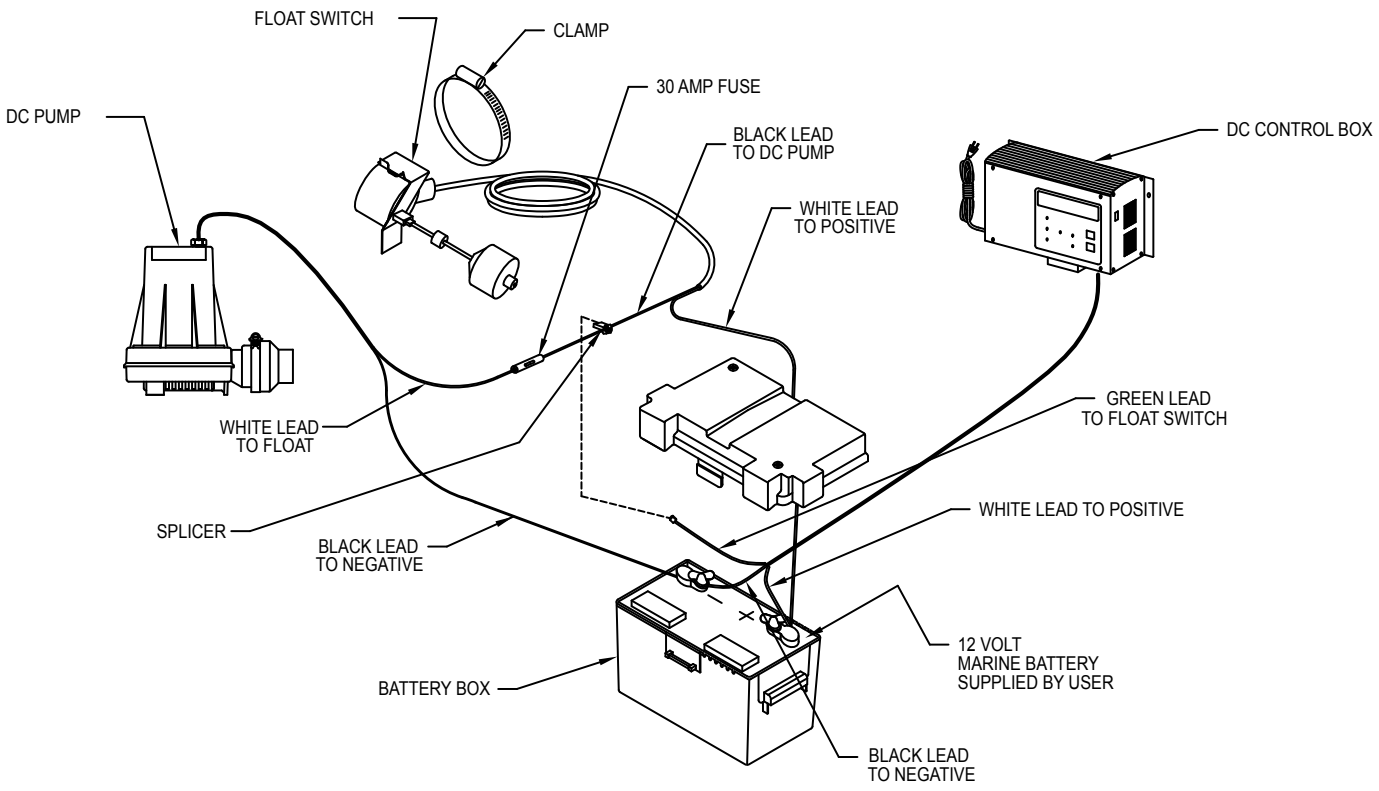

FIGURE 3

SK2961

All installations must comply with all applicable electrical and plumbing codes, including, but not limited to, National Electrical Code, local, regional, and/or state plumbing codes, etc. Not intended for use in hazardous locations.

CHECKLIST

		MODEL	ProPak 508-A	ProPak 508-B
ITEM	**DESCRIPTION**	**QTY**	**1/4 thru 6/15**	**6/15 thru Current**
1	Pump, 12V DC with terminals	1	152962	152962
2	Battery box	1	10-0764	10-0764
3	DC control charger with terminals	1	153000	153000
4	“Off”/”On” float switch	1	017197	017197
5	Check valve (not shown)	1	019768	153772
6	Hose coupling and clamps	1	019857	N/A
7	Pump, M53/115V (508-0006)	1	53-0001	53-0001
	Pump, M98/115V (508-0007)		98-0001	98-0001
8	1-1/2" PVC pipe tee	1	005645	153766
9	1-1/2" X 2-1/8" long pipe	1	150197	N/A
10	1-1/2" X 8-3/4" long pipe / sch 40	1	010619	019509
11	Fuse, 30 Amp AGC	1	012353	012353

© Copyright 2015 Zoeller® Co. All rights reserved.

TROUBLESHOOTING INFORMATION

1. Charging and charged LED's alternate frequently.
   (a) This is normal when battery is being topped off.
2. DC Pump won't run.
   (a) Check 30 amp fuse in line from pump to switch (see fig. 3). If fuse is blown, replace with 30 amp AGC fuse.
   (b) Check for proper connections.
   (c) Check all wire terminal points. Clean if required.
   (d) Check for low battery. Service battery if required.
3. Pump runs but pumps very little or no water.
   (a) Check for low battery. Battery will recharge if Red power "on" light indicates power has been restored and the float switch is in the off position.
   (b) If immediate usage is required, remove and replace dead battery with a full recharged battery.
   (c) Due to varying conditions the pump may continue to run on a low battery without sufficient power to remove water. Pump will not stop running until battery is completely discharged.
   (d) **⚠ CAUTION** Weak batteries can be recharged but may not store sufficient energy for full service. A weak recharged battery can only be detected by reduced pumping time or by checking each cell with a hydrometer. If your emergency pump system is used frequently the battery should be checked by a qualified battery dealer.
4. Pump cycles too frequently.
   (a) Check positions of rubber stops on float rod.
   (b) Adjust upper rubber float stop as required. Recommended for standard installation.
5. Float switch in "on" position. Pump won't run.
   (a) Remove pump. Check for obstruction in pump preventing impeller from rotating.
6. Pump runs, but pumps water intermittently.
   (a) Pump is air locking. Check flow of water incoming to sump. If water is entering the sump at a high velocity creating a turbulent condition, a mixture of air and water may cause a complete or partial air lock and reduce or stop the flow of water in the discharge pipe.
   (b) Baffle the incoming stream of water to reduce turbulence. Diverting water stream against wall of basin usually corrects an air lock problem.
7. Water level stays high. DC Pump continues to run.
   (a) Battery is low.
   (b) If power has been restored and water in sump remains high check primary pump. Service if required.
   (c) After several hours the battery will be restored to full charge.
8. Alarm sounds during battery recharge cycle.
   (a) Push alarm reset (max. 3 times). If condition persists, replace battery.
   (b) To silence alarm if alarm will not reset, unplug the charger from 115V wall outlet, then disconnect the black lead from charger on negative (-) battery post. Check battery. Replace if necessary. Reconnect and refer to Installation (step 7).
9. Alarm does not sound when pump runs.
   (a) Pump needs to run for 1 or more seconds before alarm sounds.
   (b) Be sure alarm hasn't been silenced. Quickly press and release reset button.
   (c) Inspect the connection between the green wire and the blue connecter on the white wire. Verify that the metal spade has not "missed" its target.

SERVICE CHECKLIST

⚠ WARNING **ELECTRICAL PRECAUTIONS-** Before servicing a pump, always shut off the main power breaker and then unplug the pump - making sure you are wearing insulated protective sole shoes and not standing in water. Under flooded conditions, contact your local electric company or a qualified licensed electrician for disconnecting electrical service prior to pump removal.

⚠ WARNING Submersible pumps contain oils which becomes pressurized and hot under operating conditions - **allow 2½ hours after disconnecting before attempting service.**

CONDITION	COMMON CAUSES
A. Pump will not start or run.	Check fuse, low voltage, overload open, open or incorrect wiring, open switch, impeller or seal bound mechanically, motor or wiring shorted. Float assembly held down. Switch, damaged or out of adjustment.
B. Motor overheats and trips overload or blows fuse.	Incorrect voltage, negative head (discharge open lower than normal) impeller or seal bound mechanically, motor shorted.
C. Pump starts and stops too often.	Float switch tether length too short, check valve stuck open, or none installed in long distance line, overload open, bidding, sump pit too small.
D. Pump will not shut off.	Debris under float assembly, float bound by basin sides or other, switch, damaged or out of adjustment.
E. Pump operates but delivers little or no water.	Check inlet, strainer housing, discharge pipe, and vent holes for obstructions. Discharge head exceeds pump capacity. Low or incorrect voltage. Incoming water containing air or causing air to enter pumping chamber. Incorrect motor rotation. (DC pump only)
F. Drop in head and/or capacity after a period of use.	Increased pipe friction, clogged line or check valve. Abrasive material and adverse chemicals could possibly deteriorate impeller and pump housing. Check line. Remove base and inspect.
G. If tank or fittings leak.	Carefully tighten pipe joints (use pipe dope) and screws. Check gasket location, tighten lid evenly. Do not over tighten fittings or screws.

If the above checklist does not uncover the problem, consult the factory - Do not attempt to service or otherwise disassemble pump. Service must be performed by Zoeller Authorized Service Stations. Go to www.zoellerpumps.com/service stations to find the Authorized Service Station in your area.

© Copyright 2015 Zoeller® Co. All rights reserved.

FLOAT SWITCH

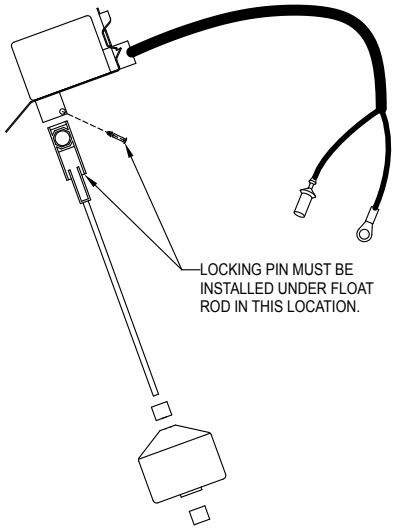

FIGURE 4 SK2503

CONTROL CHARGER

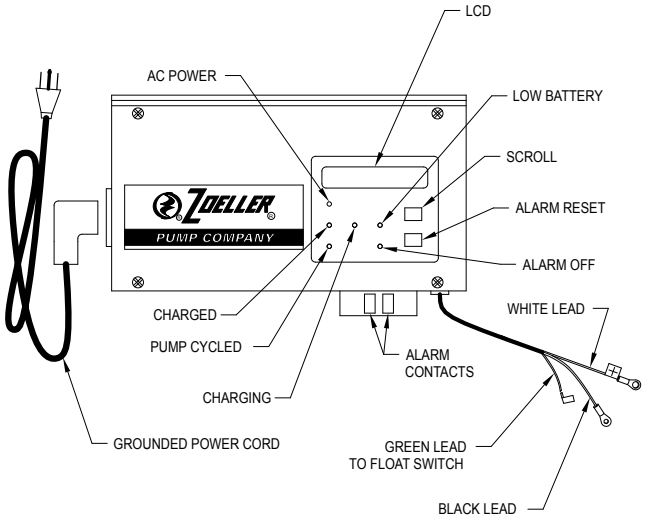

FIGURE 5 SK2958

LCD DISPLAY AND KEYPAD FUNCTIONS

There are two buttons on the front of the charger:

- The scroll button is used to cycle through the information on the LCD screen.
- The alarm reset button:
  - Can be pressed to clear alarm buzzer, light and/or display.
  - Can be held for longer than 3 seconds to silence the buzzer for a 24-hour period.

The LCD screen will display information about the system by simply hitting the scroll button:

- The bottom line of the LCD will always display the battery voltage and current going to the battery, if charging.
- The alarm screen shows current alarms.
- The cycle counter screen shows how many times the DC float has been activated.
- The AC power loss counter screen shows how many times the AC power has been removed from the charger.
- Optional: a screen may also show the name and number of a service provider.

The 6 LED lights also display information about the charger at a glance:

- The red AC *power* light will be on if AC power is connected, and it will blink if AC power is not connected.
- The green *charged* light indicates a full battery, ready for operation.
- The yellow *charging* light indicates power going to the battery.
- The red *low battery* light blinks when the battery is below 10.8 volts and rapidly blinks when the battery is below 8.4 volts.
- The yellow *pump cycled* light will blink when the float is activated, and becomes solid after 3 seconds.

NOTE: The pump activates when float activates. Alarm is delayed to reduce nuisance alarms.

- The yellow *alarm off* light indicates the buzzer is currently silenced.

CARBON MONOXIDE DETECTORS

Whether you have a Zoeller Backup Pump System, or a competitive brand, all use batteries that give off gaseous by-products when charging. Some of these by-products can produce a rotten egg odor. Also, some of these by-products can cause a CO detector to falsely activate. In order to help prevent false activation, Zoeller Company recommends moving the battery as far apart from the CO detector as possible or, if necessary, vent the battery to the exterior. Zoeller Company provides the previous statements only as guidelines to help prevent false activation of the CO detector. In no way are they meant to supersede the instructions that accompany the detector nor do they supersede advice from the CO detector manufacturer.

If the audible alarm associated with your CO detector is activated, we recommend the following actions:

1) Take immediate action for personal safety as recommended in the CO detector literature.
2) Contact the appropriate agency to determine if the CO is being produced by your furnace, water heater, or any other device which uses natural gas.
3) If you are certain that no CO is being produced, then a charging battery may be producing gaseous by-products which are causing the CO detector to activate. Contact the manufacturer and ask for recommendations as to what can be done to prevent the alarm activation.

© Copyright 2015 Zoeller® Co. All rights reserved.