Your Peace of Mind is Our Top Priority®

Product information presented here reflects conditions at time of publication. Consult factory regarding discrepancies or inconsistencies.

ZOELLER®

PUMP COMPANY

Zoeller Family of Water Solutions™

MAIL TO: *P.O. BOX 16347 • Louisville, KY 40256-0347 USA*
SHIP TO: *3649 Cane Run Road • Louisville, KY 40211-1961 USA*
+1 (502) 778-2731 • FAX +1 (502) 774-3624

FM0537_Eb
0314
Supersedes
0811

50 Hz

visit our web site:
www.zoeller.com

REPLACEMENT PARTS LIST FOR MODELS:

U55 AUTOMATIC 220V/50 Hz
V55 NONAUTOMATIC 220V/50 Hz

Consult factory for all other models

TO ORDER REPLACEMENT PARTS:

PLEASE FURNISH THE FOLLOWING INFORMATION:

- Model Number.
- Part Number of Pump.
- Part Number and Description of part.

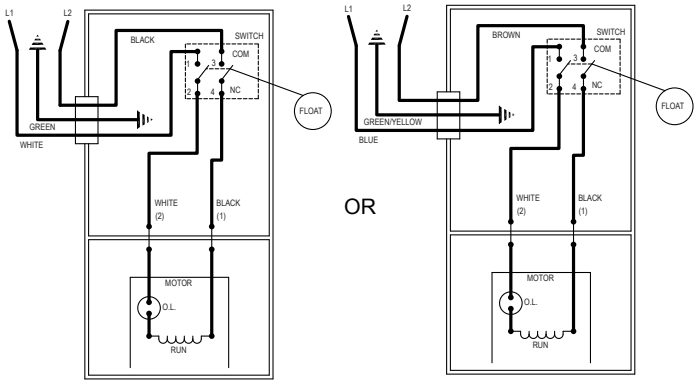

004619

WIRING DIAGRAM FOR MODEL
"U55"
01/01 thru Current

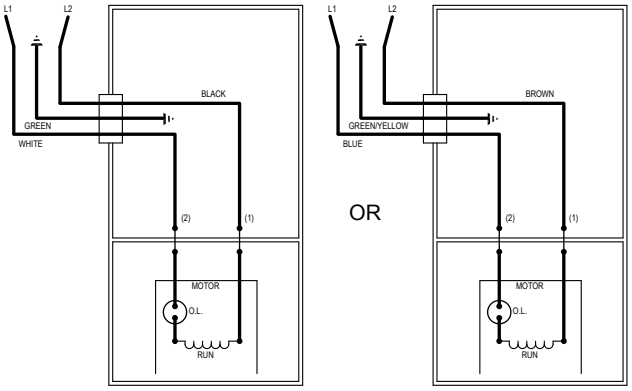

002392

WIRING DIAGRAM FOR MODEL
"V55-A"
05/09 thru Current

© Copyright 2014 Zoeller Co. All rights reserved.

REPLACEMENT PARTS LIST FOR MODEL "U55"

MODELS: U55-A & B					
REF. NO.	KIT	DESCRIPTION	QTY	NOTES	01/01 thru Current
1	•	Gasket, Case / Cover	1		034046
2	•	Clamp, Strain Relief	1		004200
3	•	Seal, Cord - Asm	1		151324
4		Cord Term & Seal (33' Length)	1	1	151323
5		Stator Regal-Beloit	1		007952
6	•	Screw, #8 - 32 x 2.563	1		001914
7		Rotor Asm Regal-Beloit	1		054032
8	•	Seal, Mtr Hsg	1		034007
9	•	Washer, Thrust	1		002140
10		Bearing, Sleeve - Lower Rotor	1		054024
11	•	Oil, Dielectric	1		002588
12		Housing, Pump - Mach	1		059005
13	•	Seal Asm, Shaft - Blister Pak	1		267027
14		Impeller - Plastic	1	5	002570
15		Base Asm	1		002690
16		Plate, Strainer - Plastic	1		N/A
17		Case Handle & Arm Asm	1		004714
18		Case & Switch	1		004711
19	•	Plug, Test	1		034090
20	•	Arm & Seal Asm	1		004704
21		Guard	1		004645
22		Switch Asm	1		004705
23	•	Seal, Thru Wall Term	2		003402
24		Housing, Mtr & Term Asm	1		004713
25		Bearing, Upper Rotor	1		034052
26		Float - Polypropylene	1		034019
27		Rod Asm, Flt	1		054062
28		Guide Asm, Flt Rod	1		034086
29	•	Screw, #10 - 24 x .75	16		001885
30	•	Screw, #6 - 32 x .438	2		004644
31	•	Screw, #6 - 32 x .25	1		001877
32		Screw, Sem, #10 - 12 x .5	3		N/A
¤		Rebuild Kit	1		151325

• Items included in Rebuild Kit. ¤ Not shown in illustration.

REPLACEMENT PARTS LIST FOR MODEL "V55-A"

MODEL: V55-A					
REF. NO.	KIT	DESCRIPTION	QTY	NOTES	05/09 thru Current
1	•	Gasket, Case / Cover	1		034046
2	•	Seal, Cord - Asm	1		151324
3	•	Clamp, Strain Relief	1		004200
4		Cord, Term & Seal (33' Length)	1	1	151453
5		Stator Regal-Beloit	1		007952
6	•	Screw, #8 - 32 x 2.563	2		001914
7		Rotor Asm Regal-Beloit	1		054032
8	•	Seal, Mtr Hsg	1		034007
9	•	Washer, Thrust	1		002140
10		Bearing, Sleeve - Lower Rotor	1		054024
11	•	Oil, Dielectric	1		002588
12		Housing, Pump - Mach	1		059005
13	•	Seal Asm, Shaft - Blister Pak	1		267027
14		Impeller - Plastic	1		002570
15		Base Asm	1		002690
16		Plate, Strainer - Plastic	1		N/A
17		Cover & Handle	1		036067
18	•	Plug, Test	1		034090
19	•	Seal,Thru Wall Term	2		003402
20		Housing, Mtr & Term Asm	1		004713
21		Bearing, Upper Rotor	1		034052
22	•	Screw, #10 - 24 x .75	16		001885
23	•	Screw, #6 - 32 x .25	1		001877
24		Screw, Sem, #10 - 12 x .5	3		N/A
¤		Rebuild Kit	1		151325

• Items included in Rebuild Kit. ¤ Not shown in illustration.

NOTES:

1) Strain Relief (Item 2) can be purchased separately, but is included with Cord,Terminal & Seal Assembly (Item 4) and with Seal, Cord Assembly (Item 3).

2) See FM0160 Parts Price Sheet for listing of parts prices.

3) "NA" indicates, not applicable.

4) If an "X" follows Model No., or Date Mfg. on ID tag, consult factory for ordering any parts.

5) Revision A pump utilized standard 50 series impeller. Pump now uses 98 impeller Pump was incremented to B for performance increase. Impeller is interchangeable.

NOTES:

1) Strain Relief (Item 3) can be purchased separately, but is included with Cord,Terminal & Seal Assembly (Item 4) and with Seal, Cord Assembly (Item 2).

2) See FM0160 Parts Price Sheet for listing of parts prices.

3) "NA" indicates, not applicable.

4) If an "X" follows Model No., or Date Mfg. on ID tag, consult factory for ordering any parts.

© Copyright 2014 Zoeller Co. All rights reserved.

REPLACEMENT PARTS ILLUSTRATION FOR MODEL "U55"

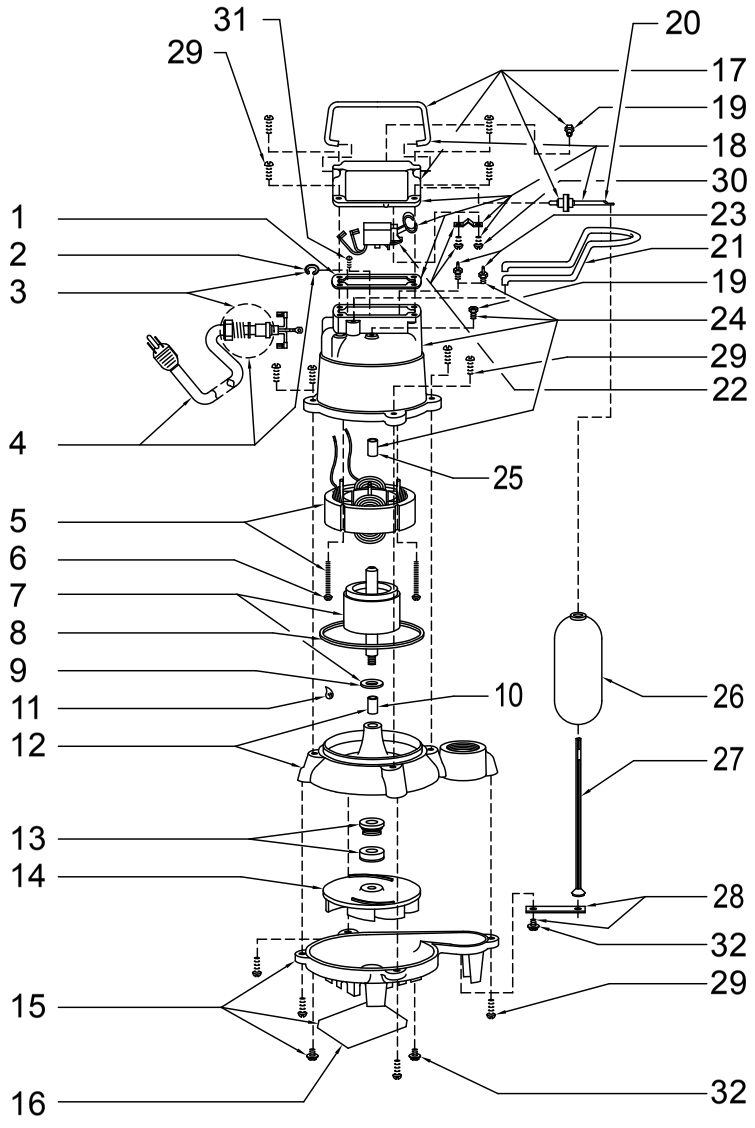

REPLACEMENT PARTS ILLUSTRATION FOR MODEL "V55"

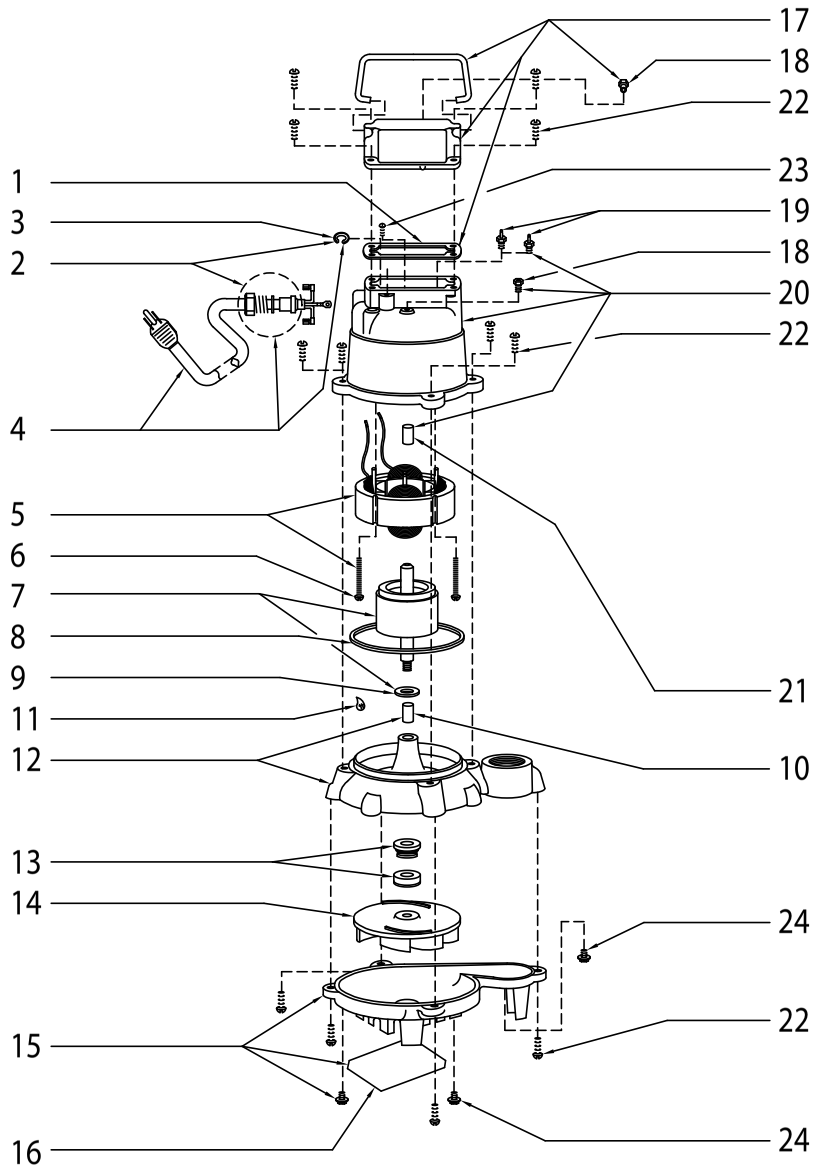

© Copyright 2014 Zoeller Co. All rights reserved.

NOTES

ZOELLER®
PUMP COMPANY

MAIL TO: P.O. BOX 16347 • Louisville, KY 40256-0347 USA
SHIP TO: 3649 Cane Run Road • Louisville, KY 40211-1961 USA
+1 (502) 778-2731 • FAX +1 (502) 774-3624

Your Peace of Mind is Our Top Priority®

visit our web site:
www.zoeller.com

© Copyright 2014 Zoeller Co. All rights reserved.