Your Peace of Mind is Our Top Priority®

Product information presented here reflects conditions at time of publication. Consult factory regarding discrepancies or inconsistencies.

ZOELLER®
PUMP COMPANY
Zoeller Family of Water Solutions™

SECTION: 2.20.030
FM2789
1215
Supersedes
0814

TECHNICAL DATA SHEET
WASTE-MATE SERIES
*Models 266, 267, 268 Sewage/*Effluent or Dewatering Pumps*

PRODUCT SPECIFICATIONS

MOTOR	Horse Power	1/2
	Voltage	115 - 460
	Phase	1 or 3 Ph
	Hertz	60 Hz
	RPM	1725
	Type	Split phase or 3 Ph
	Insulation	Class A or B
	Amps	1.5 - 10.4
PUMP	Operation	Automatic or nonautomatic
	Auto On/Off Points	12" (30 cm) / 4" (10 cm)
	Discharge Size	2" female or 3" NPT male
	Solids Handling	2" (50 mm) spherical solids
	Cord Length	10' (3 m) automatic or 15' (5 m) nonautomatic
	Cord Type	UL listed neoprene cord and plug
	Max. Head	21.5' (6.6 m)
	Max. Flow Rate	128 GPM (484 LPM)
	Max. Operating Temp.	130° F (54° C)
	Cooling	Oil filled
	Motor Protection	Auto reset thermal overload (1 Ph)
MATERIALS	Cap	Cast iron
	Motor Housing	Cast iron
	Pump Housing	Cast iron
	Base	Cast iron or engineered plastic
	Upper Bearing	Sleeve bearing
	Lower Bearing	Sleeve bearing
	Mechanical Seals	Carbon and ceramic
	Impeller Type	Non-clogging vortex
	Impeller	Engineered plastic w/ metal insert
	Hardware	Stainless steel
	Motor Shaft	AISI 1215 cold rolled steel
	Gasket	Neoprene
	Min. Basin Size	Simplex: 18" x 30" (45.7 x 76.2 cm) Duplex: 30" x 36" (76.2 x 91.4 cm)

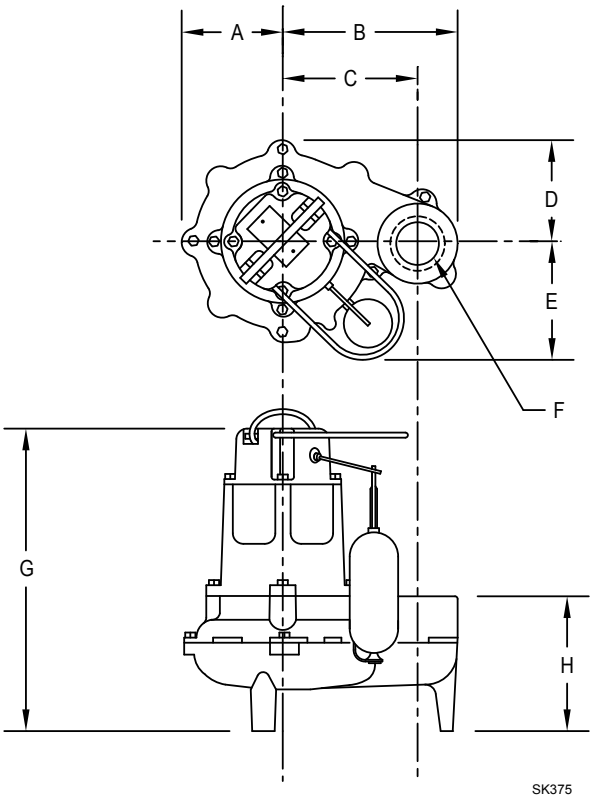

NOTE: The sizing of effluent systems normally requires variable level float(s) controls and properly sized basins to achieve required pumping cycles or dosing timers with nonautomatic pumps. See model comparison chart for specific details.

* May be used in those states where codes do not restrict solids size in effluent systems.

MODEL DIMENSIONS

MODEL	A	B	C	D	E	F	G	H
266	4 3/4" [12.1cm]	8 5/16" [21.1cm]	6 13/32" [16.3cm]	4 3/4" [12.1cm]	6 15/32" [16.4cm]	2" NPT	14 1/32" [35.6cm]	6 3/32" [15.5cm]
267	4 3/4" [12.1cm]	8 5/16" [21.1cm]	6 13/32" [16.3cm]	4 3/4" [12.1cm]	6 15/32" [16.4cm]	2" NPT	14 5/8" [37.2cm]	6 3/4" [17.1cm]
268	4 3/4" [12.1cm]	8 13/32" [21.4cm]	6 13/32" [16.3cm]	4 3/4" [12.1cm]	6 15/32" [16.4cm]	2"/3" NPT	14 5/8" [37.2cm]	9 1/16" [23.0cm]

Tested to Standard UL778 and Certified to CSA Standard C22.2 No. 108

© Copyright 2015 Zoeller® Co. All rights reserved.

502-778-2731 | 800-928-7867 | 3649 Cane Run Road | Louisville, KY 40211-1961 | www.zoeller.com

SELECTION GUIDE

1. Integral float operated mechanical switch, no external control required.
2. For automatic use single piggyback variable level float switch or double piggyback variable level float switch. Refer to FM0477.
3. See FM1228 for correct model of simplex control panel.
4. See FM0712 for correct model of duplex control panel or FM1663 for a residential alternator system.

SPECIAL MODEL FEATURES

- Model 266 features a plastic base.
- Models 267 and 268 feature a cast iron base.
- Model 267 is available with a cast iron impeller, which is standard on all 3 Ph units.
- Model 268 includes a 2" NPT female and 3" NPT male discharge.
- BN and BE models include a variable level pump switch.
- Additional cord lengths are available in 15' (5 m), 35' (11 m) and 50' (15 m).

CONSULT FACTORY FOR SPECIAL APPLICATIONS

- Minimum recommended basin size (Small load applications)
  Simplex - 18" x 30" (45.7 x 76.2 cm)
  Duplex - 30" x 36" (76.2 x 91.4 cm)
- High water alarms available

Standard All Models:
266 - Weight 41 lbs. (18.6 kg)
267 - Weight 47.5 lbs. (21.5 kg)
268 - Weight 51 lbs. (23.1 kg)

For "M" and "D" models, the approximate volume pumped out per cycle are:

Tank Diameter	Volume Pumped
18" Simplex	8 Gal (30.2 L)
24" Simplex	15 Gal (56.8 L)
30" Duplex	22 Gal (83.3 L)
36" Duplex	33 Gal (124.9 L)
48" Duplex	60 Gal (227.1 L)

CAUTION Maximum temperature of sewage or dewatering must be limited to 130°F (54°C). For over 130°F (54°C), special quotation required.

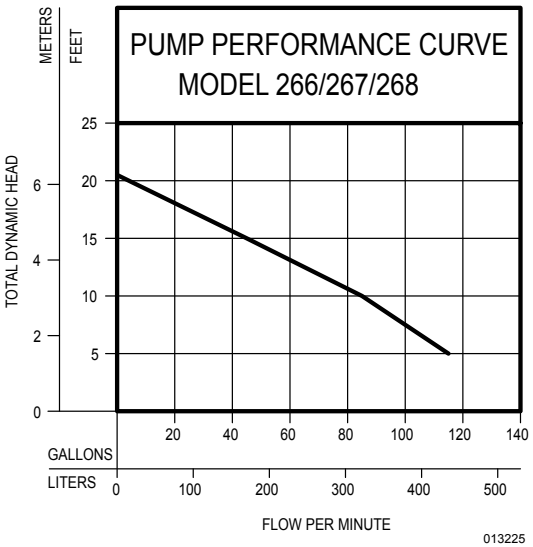

MODEL		266/267/268	
Feet	Meters	Gal.	Liters
5	1.5	115	435
10	3.0	85	322
15	4.6	45	170
Shut-off Head:		20.5 ft.(6.2m)	

Model	MODEL COMPARISON											CERTIFICATIONS	
	Seal	Mode	Volts	Ph	Amps	HP	Hz	Lbs	Kg	Simplex	Duplex	cCSAus	UL
M266/BN266	Single	Auto	115	1	10.4	1/2	60	41.0	19	1	4	Y	Y
N266	Single	Non	115	1	10.4	1/2	60	41.0	19	2 or 3	2 or 4	Y	Y
D266/BE266	Single	Auto	230	1	5.5	1/2	60	41.0	19	1	---	Y	Y
E266	Single	Non	230	1	5.5	1/2	60	41.0	19	2 or 3	4	Y	Y
H266	Single	Auto	200-208	1	6.2	1/2	60	41.0	19	1	---	Y	N
I266	Single	Non	200-208	1	6.2	1/2	60	41.0	19	3	4	Y	N
J266	Single	Non	200-208	3	2.6	1/2	60	41.0	19	3	4	Y	Y
F266	Single	Non	230	3	2.6	1/2	60	40.0	18	3	4	Y	Y
G266	Single	Non	460	3	1.5	1/2	60	40.0	18	3	4	Y	Y
M267/BN267	Single	Auto	115	1	10.4	1/2	60	47.5	22	1	4	Y	Y
N267	Single	Non	115	1	10.4	1/2	60	47.5	22	2 or 3	4	Y	Y
D267/BE267	Single	Auto	230	1	5.5	1/2	60	47.5	22	1	---	Y	Y
E267	Single	Non	230	1	5.5	1/2	60	47.5	22	2 or 3	4	Y	Y
H267	Single	Auto	200-208	1	6.2	1/2	60	47.5	22	1	---	Y	N
I267	Single	Non	200-208	1	6.2	1/2	60	47.5	22	3	4	Y	N
J267	Single	Non	200-208	3	2.6	1/2	60	47.5	22	3	4	Y	Y
F267	Single	Non	230	3	2.6	1/2	60	47.5	22	3	4	Y	Y
G267	Single	Non	460	3	1.5	1/2	60	47.5	22	3	4	Y	Y
M268/BN268	Single	Auto	115	1	10.4	1/2	60	51.0	23	1	4	Y	Y
N268	Single	Non	115	1	10.4	1/2	60	51.0	23	2 or 3	4	Y	Y
D268/BE268	Single	Auto	230	1	5.5	1/2	60	51.0	23	1	4	Y	Y
E268	Single	Non	230	1	5.5	1/2	60	51.0	23	2 or 3	4	Y	Y
H268	Single	Auto	200-208	1	6.2	1/2	60	51.0	23	1	---	Y	N
I268	Single	Non	200-208	1	6.2	1/2	60	51.0	23	3	4	Y	N
J268	Single	Non	200-208	3	2.6	1/2	60	51.0	23	3	4	Y	Y
F268	Single	Non	230	3	2.6	1/2	60	51.0	23	3	4	Y	Y
G268	Single	Non	460	3	1.5	1/2	60	51.0	23	3	4	Y	Y

CAUTION All installation of controls, protection devices and wiring should be done by a qualified licensed electrician. All electrical and safety codes should be followed including the most recent National Electrical Code (NEC) and the Occupational Safety and Health Act (OSHA).

© Copyright 2015 Zoeller® Co. All rights reserved.
502-778-2731 | 800-928-7867 | 3649 Cane Run Road | Louisville, KY 40211-1961 | www.zoeller.com