*Your Peace of Mind is Our Top Priority®*

Product information presented here reflects conditions at time of publication. Consult factory regarding discrepancies or inconsistencies.

ZOELLER®
PUMP COMPANY
Zoeller Family of Water Solutions™

**MAIL TO:** P.O. BOX 16347 • Louisville, KY 40256-0347 USA
**SHIP TO:** 3649 Cane Run Road • Louisville, KY 40211-1961 USA
+1 (502) 778-2731 • FAX +1 (502) 774-3624

**50/60Hz**

FM2436_Ec
0315
Supersedes
0514

***visit our web site:***
***www.zoeller.com***

# REPLACEMENT PARTS LIST FOR GRINDER MODELS:

## E815 NONAUTOMATIC 230V 1PH 60 HZ
## RE815 NONAUTOMATIC/MANUAL RUN 230V 1PH 60 HZ
## RWD815 AUTOMATIC/MANUAL RUN W/WIRED FLOAT SWITCH 230V 1PH 60 HZ
## Z815 NONAUTOMATIC/MANUAL RUN 230V 1PH 50 HZ

Consult factory for all other models.

50/60 Hz Wiring

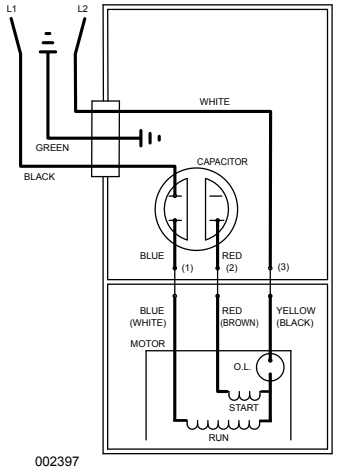


WIRING DIAGRAM FOR MODELS
"E815-A", "E815-B", "Z815"
8/06 thru Current

***TO ORDER REPLACEMENT PARTS***

**PLEASE FURNISH THE FOLLOWING INFORMATION:**

- Model number
- Part number of pump
- Part number and description of part

60 Hz Wiring

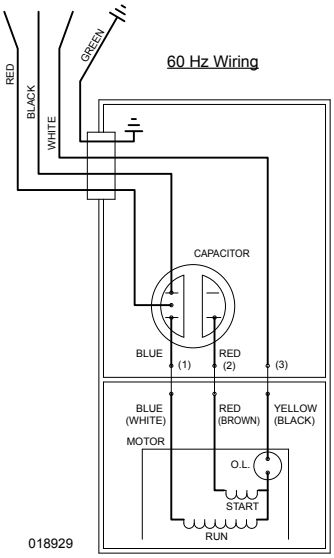


WIRING DIAGRAM FOR MODELS
"E815-A" and "E815-B"
Manual Run Option
4/07 thru 3/13

50 Hz Wiring

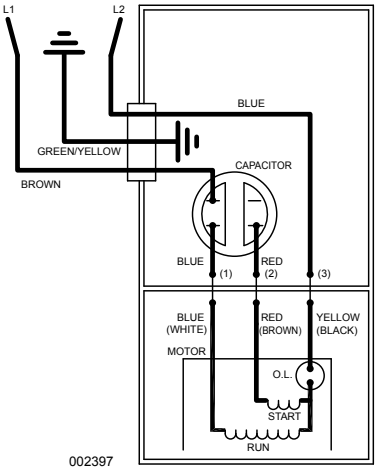


WIRING DIAGRAM FOR MODEL
"Z815"
8/06 thru Current

60 Hz Wiring

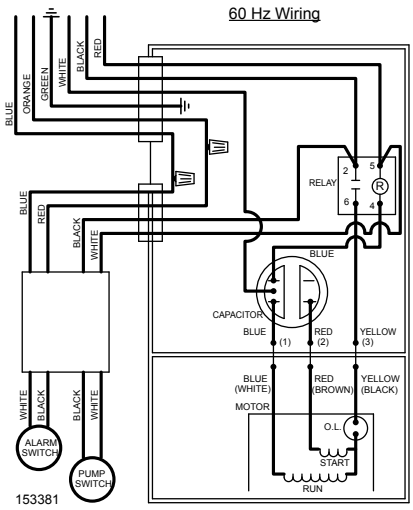


WIRING DIAGRAM FOR MODEL
"RWD815"
All revisions thru Current

60 Hz Wiring

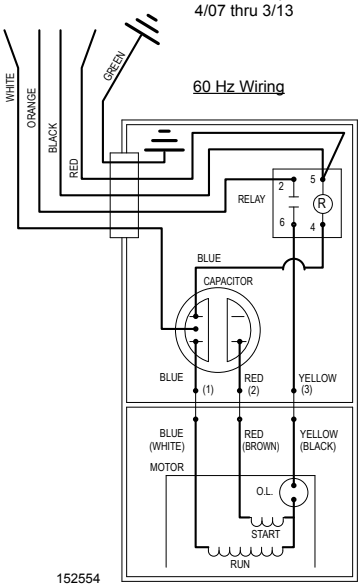


WIRING DIAGRAM FOR MODEL
"RE-815"
3/13 thru Current

© Copyright 2015 Zoeller® Co. All rights reserved.

See back page for illustration.

## REPLACEMENT PARTS LIST FOR MODELS “E815” AND “Z815”

| | | | | MODELS: | E815-A | E815-B | E815-C | Z815-A |
|---|---|---|---|---|---|---|---|---|
| REF NO. | | DESCRIPTION | QTY | NOTES | 8/06 thru 8/07 | 9/07 thru 12/07 | 1/08 thru Current | 3/15 thru Current |
| 1 | • | Handle | 1 | | 217069 | 217069 | 217069 | 217069 |
| 2 | | Cover & Cord (Cord - 20’ (6 m) length SOW 15A plug) | 1 | 2 | 002401 | 002401 | 002401 | N/A |
| | | Cover & Cord (Cord - 20’ (6 m) length SOW no plug) | | | N/A | N/A | N/A | 153109 |
| | | Cover & Cord (Cord 33’ (10 m) length H07RN-F3G1.5 no plug/CE) | | | N/A | N/A | N/A | 153101 |
| 3 | | Cord, Term & Seal Asm (Cord - 20’ (6 m) length SOW 15A plug) | 1 | 2 | 002402 | 002402 | 002402 | N/A |
| | | Cord, Term & Seal Asm (Cord - 20’ (6 m) length SOW no plug) | | | N/A | N/A | N/A | 005391 |
| | | Cord, Term & Seal Asm (Cord 33’ (10 m) length H07RN-F3G1.5 no plug) | | | N/A | N/A | N/A | 153103 |
| 4 | • | Seal, Cord-Asm & strain relief | 1 | 2 | 094032 | 094032 | 094032 | 094032 |
| 5 | | Cover-Mach. (Cord, SOW) | 1 | | 001077 | 001077 | 001077 | 001077 |
| | | Cover-Mach. (Cord, H07RN-F3G1.5/CE) | | | N/A | N/A | N/A | 152044 |
| 6 | • | Gasket, Case/Cover | 1 | | 001011 | 001011 | 001011 | 001011 |
| 7 | • | Wire Pkg. | 1 | | 011092 | 011092 | 011092 | 011092 |
| 8 | | Capacitor & Clamp Asm | 1 | | 010666 | 010666 | 151706 | 151706 |
| 9 | • | Plug, Test | 2 | | 015023 | 015023 | 015023 | 015023 |
| 10 | • | Seal, Thru Wall Term | 3 | | 003402 | 003402 | 003402 | 003402 |
| 11 | | Housing, motor & stator | 1 | 1 | 018909 | 018909 | 018909 | 153108 |
| 12 | • | Spring, Bearing Preload | 1 | | 017192 | 017192 | 017192 | 017192 |
| 13 | • | Bearing, Upper 6201 | 1 | | 006703 | 006703 | 006703 | 006703 |
| 14 | | Rotor & bearing Asm | 1 | | 018911 | 018911 | 018911 | 018911 |
| 15 | • | Key | 1 | | 017893 | 017893 | 017893 | 017893 |
| 16 | • | Bearing, Lower 6204 | 1 | | 012544 | 012544 | 012544 | 012544 |
| 17 | • | Seal, motor housing | 1 | | 001014 | 001014 | 001014 | 001014 |
| 18 | • | Oil, Dielectric-(57 Oz Can) | 1 | | 009051 | 009051 | 009051 | 009051 |
| 19 | | Adapter-Mach. | 1 | | 017891 | 017891 | 017891 | 017891 |
| 20 | • | Seal, Shaft | 1 | | 018912 | 018912 | 018912 | 018912 |
| 21 | • | Washer, Seal Locating & Snap Ring | 1 | | 018913 | 018913 | 018913 | 018913 |
| 22 | | Rotor, Pump-Hydraulic & Pin | 1 | | 018914 | 018915 | 018915 | 018915 |
| 23 | • | Pin | 1 | | 017892 | 018892 | 018892 | 018992 |
| 24 | • | Seal, Pump Housing | 1 | | 017894 | 017894 | 017894 | 017894 |
| 25 | | Housing, Pump-Mach. & Press. Rlf Valve | 1 | | 018917 | 018917 | 019551 | 019551 |
| 26 | | Leg, Wireform | 2 | | 017841 | 017841 | 017841 | 017841 |
| 27 | | Valve, Pressure Relief | 1 | | 018433 | 018433 | 018433 | 018433 |
| 28 | | Stator, Hydraulic | 1 | | 017476 | 017476 | 017476 | 017476 |
| 29 | • | Insert, Stator Ss | 6 | | 018369 | 018369 | 018369 | 018369 |
| 30 | | Cutter & Disc Asm 810/815 | 1 | | 018918 | 018918 | 018918 | 018918 |
| 31 | | Shim Set | 1 | | 012632 | 012632 | 012632 | 012632 |
| 32 | | Clamp, Strain Relief (Cord, SOW) | 1 | | 001770 | 001770 | 001770 | 001770 |
| | | Clamp, Strain Relief (Cord, H07RN-F3G1.5) | 1 | | N/A | N/A | N/A | 152191 |
| 33 | • | Screw, .25-20 X .75 HHM-SS | 4 | | 001916 | 001916 | 001916 | 001916 |
| 34 | • | Screw, #6-32 X .25 RHM SL TC STLGR | 3 | | 001877 | 001877 | 001877 | 001877 |
| 35 | • | Screw, .25-20 X 1 HHM-SS | 4 | | 007790 | 007790 | 007790 | 007790 |
| 36 | • | Screw, .313-18 X 2 HH CAP Full Thread/SS | 4 | | 018186 | 018186 | 018186 | 018186 |
| 37 | • | Washer, Flat-SS .313 | 4 | | 015914 | 015914 | 015914 | 015914 |
| 38 | • | Nut, .313-18 H–SS | 4 | | 001813 | 001813 | 001813 | 001813 |
| 39 | • | Washer, Retaining SS | 1 | | 008533 | 008533 | 008533 | 008533 |
| 40 | • | Screw, .25-20 X .75 HH SS (NYLOCK) | 1 | | 009545 | 009545 | 009545 | 009545 |
| 41 | • | Washer, Flat-SS .25 | 6 | | 004480 | 004480 | 004480 | 004480 |
| 42 | • | Screw, .25-20 X 1.125 SH CAP SS | 6 | | 018387 | 018387 | 018387 | 018387 |
| 43 | | Disc, Cutter | 1 | | 010407 | 010407 | 010407 | 010407 |
| 44 | | Cutter/Shim Asm/3 Blade | 1 | | 019695 | 019695 | 019695 | 019695 |
| 45 | | Relay | 0 | | N/A | N/A | N/A | N/A |
| 46 | | Insulation - Insulator | 0 | | N/A | N/A | N/A | N/A |
| 47 | | Switch, Flts - Term & Seal | 0 | | N/A | N/A | N/A | N/A |
| 48 | • | Seal, Cord - Flt Switch | 0 | | N/A | N/A | N/A | N/A |
| 49 | • | Connector Wirenut | 0 | | N/A | N/A | N/A | N/A |
| ¤ | | Rebuild Kit | | | 018919 | 018920 | 018920 | 018920 |

• Items included in Rebuild Kit. ¤ Not Shown in Illustration.

© Copyright 2015 Zoeller® Co. All rights reserved.

See back page for illustration.

# REPLACEMENT PARTS LIST FOR MODELS “E815”, “RE815” AND “RWD815” MANUAL RUN OPTION

| | | | | MODELS: | E815-A | E815-B | E815-C | | RE815-A | | RWD815 |
|---|---|---|---|---|---|---|---|---|---|---|---|
| REF NO. | DESCRIPTION | QTY | NOTES | | 4/07 thru 8/07 | 9/07 thru 12/07 | 1/08 thru 3/13 | | 3/13 thru Current | | 3/15 thru Current |
| 1 | • Handle | 1 | | | 217069 | 217069 | 217069 | | 217069 | | 217069 |
| 2 | Cover & Cord | 1 | 2 | | 018927 | 018927 | 018927 | | 152532 | | 153382 |
| 3 | Cord, Term & Seal Asm | 1 | 2 | | 018928 | 018928 | 018928 | | 152533 | | 153386 |
| 4 | • Seal, cord-Asm & strain relief | 1 | 2 | | 094032 | 094032 | 094032 | | 015634 | | 015634 |
| 5 | Cover-Mach. | 1 | | | 001077 | 001077 | 001077 | | 014150 | | 014152 |
| 6 | • Gasket, Case/Cover | 1 | | | 001011 | 001011 | 001011 | | 001011 | | 001011 |
| 7 | • Wire Pkg. | 1 | | | 011092 | 011092 | 011092 | | 004751 | | 004751 |
| 8 | Capacitor & Clamp Asm | 1 | | | 010666 | 010666 | 151706 | | 151706 | | 151706 |
| 9 | • Plug, Test | 2 | | | 015023 | 015023 | 015023 | | 015023 | | 015023 |
| 10 | • Seal, Thru Wall Term | 3 | | | 003402 | 003402 | 003402 | | 003402 | | 003402 |
| 11 | Housing, motor & stator | 1 | 1 | | 018909 | 018909 | 018909 | | 018909 | | 018909 |
| 12 | • Spring, Bearing Preload | 1 | | | 017192 | 017192 | 017192 | | 017192 | | 017192 |
| 13 | • Bearing, Upper 6201 | 1 | | | 006703 | 006703 | 006703 | | 006703 | | 006703 |
| 14 | Rotor & bearing Asm | 1 | | | 018911 | 018911 | 018911 | | 018911 | | 018911 |
| 15 | • Key | 1 | | | 017893 | 017893 | 017893 | | 017893 | | 017893 |
| 16 | • Bearing, Lower 6204 | 1 | | | 012544 | 012544 | 012544 | | 012544 | | 012544 |
| 17 | • Seal, motor housing | 1 | | | 001014 | 001014 | 001014 | | 001014 | | 001014 |
| 18 | • Oil, Dielectric-(57 Oz Can) | 1 | | | 009051 | 009051 | 009051 | | 009051 | | 009051 |
| 19 | Adapter-Mach. | 1 | | | 017891 | 017891 | 017891 | | 017891 | | 017891 |
| 20 | • Seal, Shaft | 1 | | | 018912 | 018912 | 018912 | | 018912 | | 018912 |
| 21 | • Washer, Seal Locating & Snap Ring | 1 | | | 018913 | 018913 | 018913 | | 018913 | | 018913 |
| 22 | Rotor, Pump-Hydraulic & Pin | 1 | | | 018914 | 018915 | 018915 | | 018915 | | 018915 |
| 23 | • Pin | 1 | | | 017892 | 018892 | 018892 | | 018892 | | 018892 |
| 24 | • Seal, Pump Housing | 1 | | | 017894 | 017894 | 017894 | | 017894 | | 017894 |
| 25 | Housing, Pump-Mach. & Press. Rlf Valve | 1 | | | 018917 | 018917 | 019551 | | 019551 | | 019551 |
| 26 | Leg, Wireform | 2 | | | 017841 | 017841 | 017841 | | 017841 | | 017841 |
| 27 | Valve, Pressure Relief | 1 | | | 018433 | 018433 | 018433 | | 018433 | | 018433 |
| 28 | Stator, Hydraulic | 1 | | | 017476 | 017476 | 017476 | | 017476 | | 017476 |
| 29 | • Insert, Stator Ss | 6 | | | 018369 | 018369 | 018369 | | 018369 | | 018369 |
| 30 | Cutter & Disc Asm 810/815 | 1 | | | 018918 | 018918 | 018918 | | 018918 | | 018918 |
| 31 | Shim Set | 1 | | | 012632 | 012632 | 012632 | | 012632 | | 012632 |
| 32 | Clamp, Strain Relief-Red | 1 | | | 001770 | 001770 | 001770 | | 013765 | | 013765 |
| 33 | • Screw, .25-20 X .75 HHM-SS | 4 | | | 001916 | 001916 | 001916 | | 001916 | | 001916 |
| 34 | • Screw, #6-32 X .25 RHM SL TC STLGR | 4 | | | 001877 | 001877 | 001877 | | 001877 | | 001877 |
| 35 | • Screw, .25-20 X 1 HHM-SS | 4 | | | 007790 | 007790 | 007790 | | 007790 | | 007790 |
| 36 | • Screw, .313-18 X 2 HH CAP Full Thread/SS | 4 | | | 018186 | 018186 | 018186 | | 018186 | | 018186 |
| 37 | • Washer, Flat-SS .313 | 4 | | | 015914 | 015914 | 015914 | | 015914 | | 015914 |
| 38 | • Nut, .313-18 H–SS | 4 | | | 001813 | 001813 | 001813 | | 001813 | | 001813 |
| 39 | • Washer, Retaining SS | 1 | | | 008533 | 008533 | 008533 | | 008533 | | 008533 |
| 40 | • Screw, .25-20 X .75 HH SS (NYLOCK) | 1 | | | 009545 | 009545 | 009545 | | 009545 | | 009545 |
| 41 | • Washer, Flat-SS .25 | 6 | | | 004480 | 004480 | 004480 | | 004480 | | 004480 |
| 42 | • Screw, .25-20 X 1.125 SH CAP SS | 6 | | | 018387 | 018387 | 018387 | | 018387 | | 018387 |
| 43 | Disc, Cutter | 1 | | | 010407 | 010407 | 010407 | | 010407 | | 010407 |
| 44 | Cutter/Shim Asm/3 Blade | 1 | | | 019695 | 019695 | 019695 | | 019695 | | 019695 |
| 45 | Relay | 1 | | | N/A | N/A | N/A | | 217093 | | 217093 |
| 46 | Insulation - Insulator | 4 | | | N/A | N/A | N/A | | 001797 | | 001797 |
| 47 | Switch, Flts - Term & Seal | 1 | | | N/A | N/A | N/A | | N/A | | 153383 |
| 48 | • Seal, Cord - Flt Switch | 1 | | | N/A | N/A | N/A | | N/A | | 094043 |
| 49 | • Connector Wirenut | 2 | | | N/A | N/A | N/A | | N/A | | 003753 |
| ¤ | Rebuild Kit | | | | 018919 | 018920 | 018920 | | 152750 | | 152750 |

• Items included in Rebuild Kit. ¤ Not Shown in Illustration.

**NOTES**:

1) Motor housing, stator & term. (Item 11) is preassembled at the factory and must be replaced as a unit. Stator is permanently attached to the Motor Housing. Plug (Item 9) and Seal, Thru Wall Term. (Item 10) are replaceable.
2) If an “X” follows Model No., or Date Mfg. on brass ID tag, consult factory for ordering of this part.
3) See FM0160 Parts Price Sheet for listing of parts prices.
4) “N/A” indicates, not applicable.

© Copyright 2015 Zoeller® Co. All rights reserved.

## REPLACEMENT PARTS ILLUSTRATION FOR 815 - ALL MODELS

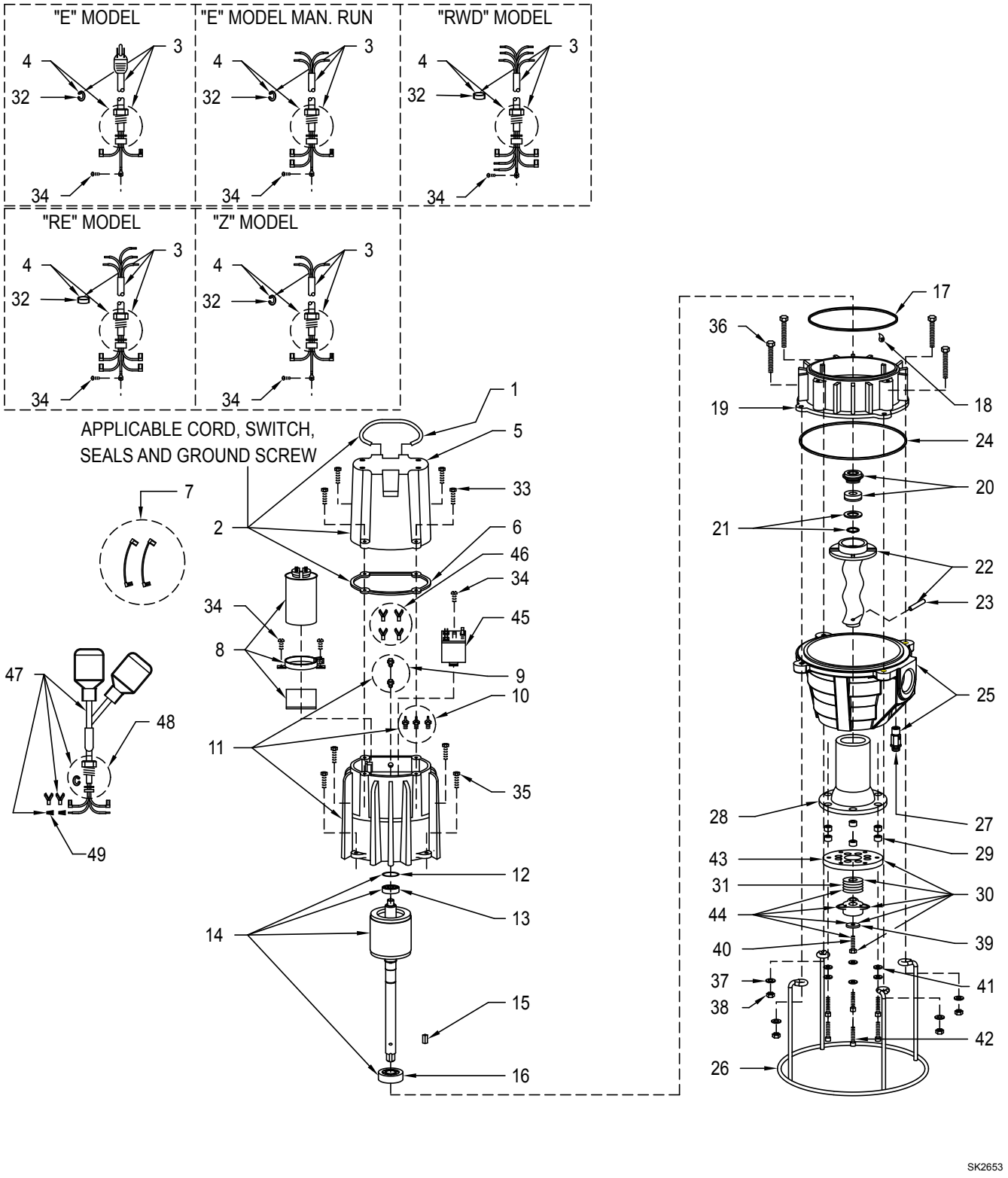



ZOELLER® PUMP COMPANY

***MAIL TO:*** *P.O. BOX 16347 • Louisville, KY 40256-0347 USA*
***SHIP TO:*** *3649 Cane Run Road • Louisville, KY 40211-1961 USA*
*+1 (502) 778-2731 • FAX +1 (502) 774-3624*

***Your Peace of Mind is Our Top Priority®***

***visit our web site: www.zoeller.com***


© Copyright 2015 Zoeller® Co. All rights reserved.