Product information presented here reflects conditions at time of publication. Consult factory regarding discrepancies or inconsistencies.

ZOELLER®
PUMP COMPANY
Zoeller Family of Water Solutions™

**MAIL TO:** P.O. BOX 16347 • Louisville, KY 40256-0347
**SHIP TO:** 3649 Cane Run Road • Louisville, KY 40211-1961
(502) 778-2731 • 1 (800) 928-PUMP • FAX (502) 774-3624

***visit our web site: www.zoeller.com***

# REPLACEMENT PARTS LIST FOR MODELS:

## M3282 AUTOMATIC 115V
## N3282 NONAUTOMATIC 115V
## D3282 AUTOMATIC 230V
## E3282 NONAUTOMATIC 230V

Consult factory for all other models

***TO ORDER REPLACEMENT PARTS:***

**PLEASE FURNISH THE FOLLOWING INFORMATION:**

- Model Number.
- Part Number of Pump.
  (If manufactured prior to June 1988, give 2 letter date code following Model No.)
- Part Number and Description of part.

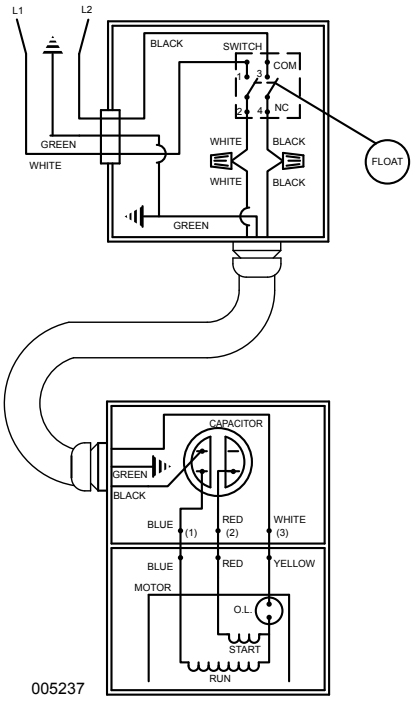


WIRING DIAGRAM FOR MODELS
"M3282" All Revisions and "D3282" All Revisions
10/87 (WT) to Current

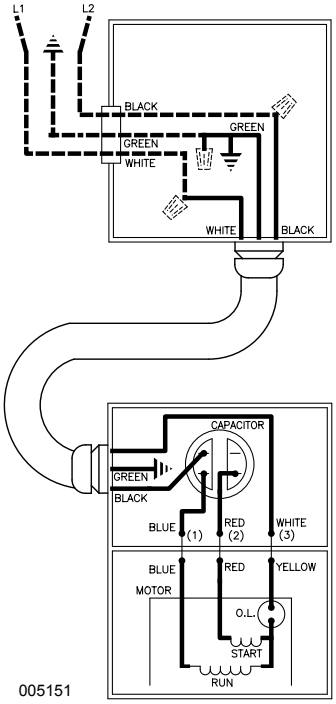


WIRING DIAGRAM FOR MODELS
"N3282" All Revisions and "E3282" All Revisions
10/87 (WT) thru Current

© Copyright 2014 Zoeller Co. All rights reserved.

# REPLACEMENT PARTS LIST FOR MODEL “M3282”

See page 6 for illustrations.

| | | | | MODELS: M3282-A | M3282-B | M3282-C | M3282-D | M3282-E | M3282-F |
|---|---|---|---|---|---|---|---|---|---|
| REF. NO. | DESCRIPTION | QTY | NOTES | 10/87 WT thru 5/92 | 6/92 thru 11/92 | 12/92 thru 9/94 | 10/94 thru 9/01 | 10/01 thru 5/10 | 6/10 thru Current |
| 1 | • Handle | 1 | | 217069 | 217069 | 217069 | 217069 | 217069 | 217069 |
| 2 | Cover & Handle | 1 | | 005365 | 005365 | 005365 | 009662 | 009662 | 009662 |
| 3 | • Gasket, Case or Cover | 1 | | 012649 | 012649 | 012649 | 012649 | 012649 | 012649 |
| 4 | • Wire Pkg. | 1 | | 004756 | 004756 | 004756 | 004756 | 004756 | 004756 |
| 5 | Capacitor & Clamp Asm. | 1 | | 002381 | 002381 | 002381 | 002381 | 002381 | 002381 |
| 6 | • Seal, Thru Wall Term | 3 | | 003402 | 003402 | 003402 | 003402 | 003402 | 003402 |
| 7 | Mtr. Hsg, Brg, Stator & Term | 1 | 3 | 005360 | 005360 | 005360 | 005360 | 005360 | 150954 |
| 8 | Bearing, Sleeve | 1 | | 001012 | 001012 | 001012 | 001012 | 001012 | N/A |
| | Bearing, Radial | 1 | | N/A | N/A | N/A | N/A | N/A | 006703 |
| 9 | Rotor (115V/230V)-GE | 1 | | 003167 | 003167 | 007978 | 007978 | 007978 | 150874 |
| | Rotor (115V/230V)-Emerson | 1 | | 003167 | 003167 | 007979 | 007979 | 007979 | N/A |
| 10 | Bearing, Lower | 1 | | 094106 | 094106 | 001013 | 001013 | 001013 | 010069 |
| 11 | • Seal, Mtr Hsg. | 1 | | 012648 | 012648 | 012648 | 012648 | 012648 | 012648 |
| 12 | Adapter | 1 | | 002357 | 002357 | 001003 | 001003 | 001003 | 001003 |
| 13 | • Seal, Shaft | 1 | | 019068 | 019068 | 019068 | 019068 | 019068 | 019068 |
| 14 | Impeller | 1 | | 002998 | 002998 | 002998 | 002998 | 002998 | 002998 |
| 15 | Pump Housing | 1 | | 217012 | 217012 | 217012 | 217012 | 217012 | 217012 |
| 16 | • Plug | 3 | | 034051 | 034051 | 034051 | 034051 | 034051 | 015023 |
| 17 | • Oil, Dielectric | 1 | | 003168 | 006065 | 006065 | 006065 | 006065 | 150609 |
| 18 | Flange Pkg. 2 ” | 1 | | 10-1305 | 10-1305 | 10-1305 | 10-1305 | 10-1305 | 10-1305 |
| | Flange Pkg. 3 ” | 1 | | 10-1306 | 10-1306 | 10-1306 | 10-1306 | 10-1306 | 10-1306 |
| 19 | Case Handle & Arm | 1 | | 004714 | 007088 | 007088 | 007088 | 007088 | 007088 |
| 20 | Guard | 1 | | 004645 | 267008 | 267008 | 267008 | 267008 | 267008 |
| 21 | • Arm & Seal Asm. | 1 | | 004704 | 004741 | 004741 | 004741 | 004741 | 004741 |
| 22 | Case & Switch | 1 | | 005349 | 007802 | 007802 | 007802 | 007802 | 007802 |
| 23 | Switch Asm. | 1 | | 005350 | 005350 | 005350 | 005350 | 005350 | 005350 |
| 24 | • Gasket, Case or Cover | 1 | | 014553 | 014555 | 014555 | 014555 | 014555 | 014555 |
| 25 | Housing, Switch | 1 | | 004907 | 006836 | 006836 | 009453 | 009453 | 009453 |
| 26 | Float | 1 | | 034019 | 034019 | 034019 | 034019 | 034019 | 034019 |
| 27 | Float Rod Asm. | 1 | | 005352 | 005352 | 005352 | 005352 | 005352 | 005352 |
| 28 | Float-Mach | 1 | | 004912 | 004912 | 004912 | 004912 | 004912 | 004912 |
| 29 | Cord Term & Seal | 1 | 1 | 005348 | 005348 | 005348 | 005348 | 005348 | 005348 |
| 30 | Strain Relief | 3 | 1 | 001770 | 001770 | 001770 | 001770 | 001770 | 001770 |
| 31 | Seal Asm & Strain Relief | 1 | 1 | 004322 | 004322 | 004322 | 004322 | 004322 | 004322 |
| 32 | • Seal Asm, Conduit | 1 | 1 | 009603 | 009603 | 009603 | 009643 | 009643 | 009643 |
| 33 | • Seal Asm, Conduit | 1 | 1 | 005372 | 005372 | 005372 | 009643 | 009643 | 009643 |
| 34 | Cordage, Conduit & Seals | 1 | | 005373 | 005373 | 005373 | 009655 | 009655 | 009655 |
| 35 | Conduit 3’ | 1 | | 005167 | 005167 | 005167 | 005167 | 005167 | 005167 |
| 36 | Cordage & Terms | 1 | | 005351 | 005351 | 005351 | 005351 | 005351 | 005351 |
| 37 | Clamp, #60 SS Worm | 2 | | 004913 | 004913 | 004913 | 004913 | 004913 | 004913 |
| 38 | • Wirenut Connector | 2 | | 001776 | 001776 | 001776 | 001776 | 001776 | 001776 |
| 39 | • Screw, #.25-20 x .75” RHM SL-SS | 8 | | 001885 | 001916 | 001916 | 001916 | 001916 | 001916 |
| 40 | • Screw, #6-32x.25” RHM SL STLGR | 4 | | 001877 | 001877 | 001877 | 001877 | 001877 | 001877 |
| 41 | • Screw, .313-18x1” HH CAP-SS | 4 | | 002608 | 002608 | 002608 | 002608 | 002608 | 002608 |
| 42 | • Screw, #10-24 x .375 RHM SL-SS | 2 | | 001883 | 001883 | 001883 | 001883 | 001883 | 001883 |
| 43 | • Screw, #6-32x.375” RHSL STL | 2 | | 004644 | 004644 | 004644 | 004644 | 004644 | 004644 |
| 44 | • Screw, .5-13x2” HH CAP-SS | 2 | | 001909 | 001909 | 001909 | 001909 | 001909 | 001909 |
| 45 | • Washer, SS-1.25”ODx.562”IDx.078 | 2 | | 002115 | 002115 | 002115 | 002115 | 002115 | 002115 |
| 46 | • Screw, .25-20x1” HHM-SS | 4 | | 007790 | 007790 | 007790 | 007790 | 007790 | 007790 |
| 47 | Clamp, #40 SS Worm | 1 | | 004304 | 004304 | 004304 | 004304 | 004304 | 004304 |
| ¤ | Rebuild Kit | 1 | | 005366 | 008570 | 008571 | 009987 | 009987 | 150989 |

• Items included in Rebuild Kit. ¤ Not shown in illustration.

**NOTES:**

1) Strain Relief (Item 30) can be purchased separately, but is included with Cord, Terminal & Seal Assembly (Item 29) and with Seal, Cord Assembly (Items 31, 32 and 33).
2) Mtr. Hsg., Brg., Stator & Term. (Item 7) are preassembled at the factory and must be replaced as a unit. Stator is permanently attached to the Motor Housing. Plug (Item 16); Seal, Thru Wall Term. (Item 6) and Bearing - Upper (Item 8 are replaceable).
3) When ordering Motor Housing, Bearing, Stator and Term. (Item 7) or Rotor (Item9) specify either GE or Emerson motor. GE motor can be identified by (4) holes spaced at 90° around the outside diameter of the stator. Emerson motor can be identified by (4) flat edges spaced at 90° around the outside diameter of the stator.
4) See FM0160 Parts Price Sheet for listing of parts prices.
5) “NA” indicates, not applicable.

© Copyright 2014 Zoeller Co. All rights reserved.

# REPLACEMENT PARTS LIST FOR MODEL “D3282”

See page 6 for illustrations.

| | | | MODELS: D3282-A | D3282-A | D3282-B | D3282-C | D3282-D | D3282-E | D3282-F |
|---|---|---|---|---|---|---|---|---|---|
| REF. NO. | DESCRIPTION | QTY | NOTES | 10/87 WT thru 5/92 | 6/92 thru 11/92 | 12/92 thru 9.94 | 10/94 thru 9/01 | 10/01 thru 5/10 | 6/10 thru Current |
| 1 | • Handle | 1 | | 217069 | 217069 | 217069 | 217069 | 217069 | 217069 |
| 2 | Cover & Handle | 1 | | 005365 | 005365 | 005365 | 009662 | 009662 | 009662 |
| 3 | • Gasket, Case or Cover | 1 | | 012649 | 012649 | 012649 | 012649 | 012649 | 012649 |
| 4 | • Wire Pkg. | 1 | | 004756 | 004756 | 004756 | 004756 | 004756 | 004756 |
| 5 | Capacitor & Clamp Asm. | 1 | | 002381 | 002381 | 002381 | 002381 | 002381 | 002381 |
| 6 | • Seal, Thru Wall Term | 3 | | 003402 | 003402 | 003402 | 003402 | 003402 | 003402 |
| 7 | Mtr. Hsg, Brg, Stator & Term | 1 | 3 | 005361 | 005361 | 005361 | 005360 | 005360 | 150955 |
| 8 | Bearing, Sleeve | 1 | | 001012 | 001012 | 001012 | 001012 | 001012 | N/A |
| | Bearing, Radial | 1 | | N/A | N/A | N/A | N/A | N/A | 006703 |
| 9 | Rotor (115V/230V)-GE | 1 | | 003167 | 003167 | 007978 | 007978 | 007978 | 150874 |
| | Rotor (115V/230V)-Emerson | 1 | | 003167 | 003167 | 007979 | 007979 | 007979 | N/A |
| 10 | Bearing, Lower | 1 | | 094106 | 094106 | 001013 | 001013 | 001013 | 010069 |
| 11 | • Seal, Mtr Hsg. | 1 | | 012648 | 012648 | 012648 | 012648 | 012648 | 012648 |
| 12 | Adapter | 1 | | 002357 | 002357 | 001003 | 001003 | 001003 | 001003 |
| 13 | • Seal, Shaft | 1 | | 019068 | 019068 | 019068 | 019068 | 019068 | 019068 |
| 14 | Impeller | 1 | | 002998 | 002998 | 002998 | 002998 | 002998 | 002998 |
| 15 | Pump Housing | 1 | | 217012 | 217012 | 217012 | 217012 | 217012 | 217012 |
| 16 | • Plug | 3 | | 034051 | 034051 | 034051 | 034051 | 034051 | 015023 |
| 17 | • Oil, Dielectric | 1 | | 003168 | 006065 | 006065 | 006065 | 006065 | 150609 |
| 18 | Flange Pkg. 2 ” | 1 | | 10-1305 | 10-1305 | 10-1305 | 10-1305 | 10-1305 | 10-1305 |
| | Flange Pkg. 3 ” | 1 | | 10-1306 | 10-1306 | 10-1306 | 10-1306 | 10-1306 | 10-1306 |
| 19 | Case Handle & Arm | 1 | | 004714 | 007088 | 007088 | 007088 | 007088 | 007088 |
| 20 | Guard | 1 | | 004645 | 267008 | 267008 | 267008 | 267008 | 267008 |
| 21 | • Arm & Seal Asm. | 1 | | 004704 | 004741 | 004741 | 004741 | 004741 | 004741 |
| 22 | Case & Switch | 1 | | 005349 | 007802 | 007802 | 007802 | 007802 | 007802 |
| 23 | Switch Asm. | 1 | | 005350 | 005350 | 005350 | 005350 | 005350 | 005350 |
| 24 | • Gasket, Case or Cover | 1 | | 014553 | 014555 | 014555 | 014555 | 014555 | 014555 |
| 25 | Housing, Switch | 1 | | 004907 | 006836 | 006836 | 009453 | 009453 | 009453 |
| 26 | Float | 1 | | 034019 | 034019 | 034019 | 034019 | 034019 | 034019 |
| 27 | Float Rod Asm. | 1 | | 005352 | 005352 | 005352 | 005352 | 005352 | 005369 |
| 28 | Float-Mach | 1 | | 004912 | 004912 | 004912 | 004912 | 004912 | 004912 |
| 29 | Cord Term & Seal | 1 | 1 | 005369 | 005369 | 005369 | 005369 | 005369 | 005369 |
| 30 | Strain Relief | 3 | 1 | 001770 | 001770 | 001770 | 001770 | 001770 | 001770 |
| 31 | Seal Asm & Strain Relief | 1 | 1 | 004322 | 004322 | 004322 | 004322 | 004322 | 004322 |
| 32 | • Seal Asm, Conduit | 1 | 1 | 005371 | 005371 | 005371 | 009643 | 009643 | 009643 |
| 33 | • Seal Asm, Conduit | 1 | 1 | 005372 | 005372 | 005372 | 009643 | 009643 | 009643 |
| 34 | Cordage, Conduit & Seals | 1 | | 005373 | 005373 | 005373 | 009655 | 009655 | 009655 |
| 35 | Conduit 3’ | 1 | | 005167 | 005167 | 005167 | 005167 | 005167 | 005167 |
| 36 | Cordage & Terms | 1 | | 005351 | 005351 | 005351 | 005351 | 005351 | 005351 |
| 37 | Clamp, #60 SS Worm | 2 | | 004913 | 004913 | 004913 | 004913 | 004913 | 004913 |
| 38 | • Wirenut Connector | 2 | | 001776 | 001776 | 001776 | 001776 | 001776 | 001776 |
| 39 | • Screw, #.25-20 x .75” RHM SL-SS | 8 | | 001916 | 001916 | 001916 | 001916 | 001916 | 001916 |
| 40 | • Screw, #6-32x.25” RHM SL STLGR | 4 | | 001877 | 001877 | 001877 | 001877 | 001877 | 001877 |
| 41 | • Screw, .313-18x1” HH CAP-SS | 4 | | 002608 | 002608 | 002608 | 002608 | 002608 | 002608 |
| 42 | • Screw, #10-24 x .375 RHM SL-SS | 2 | | 001883 | 001883 | 001883 | 001883 | 001883 | 001883 |
| 43 | • Screw, #6-32x.375” RHSL STL | 2 | | 004644 | 004644 | 004644 | 004644 | 004644 | 004644 |
| 44 | • Screw, .5-13x2” HH CAP-SS | 2 | | 001909 | 001909 | 001909 | 001909 | 001909 | 001909 |
| 45 | • Washer, SS-1.25”ODx.562”IDx.078 | 2 | | 002115 | 002115 | 002115 | 002115 | 002115 | 002115 |
| 46 | • Screw, .25-20x1” HHM-SS | 4 | | 007790 | 007790 | 007790 | 007790 | 007790 | 007790 |
| 47 | Clamp, #40 SS Worm | 1 | | 004304 | 004304 | 004304 | 004304 | 004304 | 004304 |
| ¤ | Rebuild Kit | 1 | | 005366 | 008570 | 008571 | 009987 | 009987 | 150989 |

• Items included in Rebuild Kit. ¤ Not shown in illustration.

**NOTES:**

1) Strain Relief (Item 30) can be purchased separately, but is included with Cord, Terminal & Seal Assembly (Item 29) and with Seal, Cord Assembly (Items 31, 32 and 33).
2) Mtr. Hsg., Brg., Stator & Term. (Item 7) are preassembled at the factory and must be replaced as a unit. Stator is permanently attached to the Motor Housing. Plug (Item 16); Seal, Thru Wall Term. (Item 6) and Bearing - Upper (Item 8 are replaceable).
3) When ordering Motor Housing, Bearing, Stator and Term. (Item 7) or Rotor (Item9) specify either GE or Emerson motor. GE motor can be identified by (4) holes spaced at 90° around the outside diameter of the stator. Emerson motor can be identified by (4) flat edges spaced at 90° around the outside diameter of the stator.
4) See FM0160 Parts Price Sheet for listing of parts prices.
5) “NA” indicates, not applicable.

© Copyright 2014 Zoeller Co. All rights reserved.

# REPLACEMENT PARTS LIST FOR MODEL "N3282"

See page 7 for illustrations.

| | | | | MODELS: N3282-A | N3282-B | N3282-C | N3282-D | N3282-E | N3282-F |
|---|---|---|---|---|---|---|---|---|---|
| REF. NO. | DESCRIPTION | QTY | NOTES | 10/87 WT thru 5/92 | 6/92 thru 11/92 | 12/92 thru 9/94 | 10/94 thru 9/01 | 10/01 thru 5/10 | 6/10 thru Current |
| 1 | • Handle | 1 | | 217069 | 217069 | 217069 | 217069 | 217069 | 217069 |
| 2 | Cover & Handle | 1 | | 005365 | 005365 | 005365 | 009662 | 009662 | 009662 |
| 3 | • Gasket, Case or Cover | 1 | | 012649 | 012649 | 012649 | 012649 | 012649 | 012649 |
| 4 | • Wire Pkg. | 1 | | 004756 | 004756 | 004756 | 004756 | 004756 | 004756 |
| 5 | Capacitor & Clamp Asm. | 1 | | 002381 | 002381 | 002381 | 002381 | 002381 | 002381 |
| 6 | • Seal, Thru Wall Term | 3 | | 003402 | 003402 | 003402 | 003402 | 003402 | 003402 |
| 7 | Mtr. Hsg, Brg, Stator & Term | 1 | 3 | 005360 | 005360 | 005360 | 005360 | 005360 | 150954 |
| 8 | Bearing, Sleeve | 1 | | 001012 | 001012 | 001012 | 001012 | 001012 | N/A |
| | Bearing, Radial | 1 | | N/A | N/A | N/A | N/A | N/A | 006703 |
| 9 | Rotor (115V/230V)-GE | 1 | | 003167 | 003167 | 007978 | 007978 | 007978 | 150874 |
| | Rotor (115V/230V)-Emerson | 1 | | 003167 | 003167 | 007979 | 007979 | 007979 | N/A |
| 10 | Bearing, Lower | 1 | | 094106 | 094106 | 001013 | 001013 | 001013 | 010069 |
| 11 | • Seal, Mtr Hsg. | 1 | | 012648 | 012648 | 012648 | 012648 | 012648 | 012648 |
| 12 | Adapter | 1 | | 002357 | 002357 | 001003 | 001003 | 001003 | 001003 |
| 13 | • Seal, Shaft | 1 | | 019068 | 019068 | 019068 | 019068 | 019068 | 019068 |
| 14 | Impeller | 1 | | 002998 | 002998 | 002998 | 002998 | 002998 | 002998 |
| 15 | Pump Housing | 1 | | 217012 | 217012 | 217012 | 217012 | 217012 | 217012 |
| 16 | • Plug | 3 | | 034051 | 034051 | 034051 | 034051 | 034051 | 015023 |
| 17 | • Oil, Dielectric | 1 | | 003168 | 006065 | 006065 | 006065 | 006065 | 150609 |
| 18 | Flange Pkg. 2" | 1 | | 10-1305 | 10-1305 | 10-1305 | 10-1305 | 10-1305 | 10-1305 |
| | Flange Pkg. 3" | 1 | | 10-1306 | 10-1306 | 10-1306 | 10-1306 | 10-1306 | 10-1306 |
| 19 | Cover, Plate & Gasket | 1 | | N/A | 007652 | 007652 | 007652 | 007652 | 267051 |
| 20 | • Gasket, Case or Cover | 1 | | N/A | 014555 | 014555 | 014555 | 014555 | 014555 |
| 21 | Housing, Switch | 1 | | N/A | 006836 | 006836 | 009454 | 009454 | 009454 |
| 22 | Clamp, #60 SS Worm | 2 | | 004913 | 004913 | 004913 | 004913 | 004913 | 004913 |
| 23 | Strain Relief | 3 | 1 | 001770 | 001770 | 001770 | 001770 | 001770 | 001770 |
| 24 | • Seal Asm, Conduit | 1 | 1 | 009604 | 009604 | 009604 | 009643 | 009643 | 009643 |
| 25 | • Seal Asm, Conduit | 1 | 1 | 005372 | 005372 | 005372 | 009643 | 009643 | 009643 |
| 26 | Cordage, Conduit & Seals | 1 | | 005438 | 005438 | 005438 | 009656 | 009656 | 009656 |
| 27 | Conduit 6' | 1 | | 005252 | 005252 | 005252 | 005252 | 005252 | 005252 |
| 28 | Cordage & Terms | 1 | | 005354 | 005354 | 005354 | 005354 | 005354 | 005354 |
| 29 | • Screw, .25-20 x .75 HHMM-S | 8 | | 001916 | 001916 | 001916 | 001916 | 001916 | 001916 |
| 30 | • Screw, #6-32x.25" RHM SL STLGR | 4 | | 001877 | 001877 | 001877 | 001877 | 001877 | 001877 |
| 31 | • Screw, .313-18x1" HH CAP-SS | 4 | | 002608 | 002608 | 002608 | 002608 | 002608 | 002608 |
| 32 | • Screw, #10-24 x .375 RHM SL-SS | 4 | | 001883 | 001883 | 001883 | 001883 | 001883 | 001883 |
| 33 | • Washer, SS-1.25"ODx.562"IDx.078 | 2 | | 002115 | 002115 | 002115 | 002115 | 002115 | 002115 |
| 34 | • Screw, .5-13x2" HH CAP-SS | 2 | | 001909 | 001909 | 001909 | 001909 | 001909 | 001909 |
| 35 | • Screw, .25-20x1" HHM-SS | 1 | | 007790 | 007790 | 007790 | 007790 | 007790 | 007790 |
| 36 | Handle | 1 | | 267032 | 267032 | 267032 | 267032 | 267032 | 267032 |
| 37 | Retainer, Handle | 2 | | 267053 | 267053 | 267053 | 267053 | 267053 | 267053 |
| 40 | Junction Box Asm. | 1 | | 005435 | N/A | N/A | N/A | N/A | N/A |
| ¤ | Rebuild Kit | 1 | | 005362 | 008570 | 008571 | 009987 | 009987 | 150989 |

• Items included in Rebuild Kit. ¤ Not shown in illustration.

**NOTES:**

1) Strain Relief (Item 23) can be purchased separately, but is included with Cord, Terminal & Seal Assembly (Item 26) and with Seal, Cord Assembly (Items 24 and 25).
2) Mtr. Hsg., Brg., Stator & Term. (Item 7) are preassembled at the factory and must be replaced as a unit. Stator is permanently attached to the Motor Housing. Plug (Item 16); Seal, Thru Wall Term. (Item 6) and Bearing - Upper (Item 8) are replaceable.
3) When ordering Motor Housing, Bearing, Stator and Term. (Item 9) or Rotor (Item11) specify either GE or Emerson motor. GE motor can be identified by (4) holes spaced at 90° around the outside diameter of the stator. Emerson motor can be identified by (4) flat edges spaced at 90° around the outside diameter of the stator.
4) See FM0160 Parts Price Sheet for listing of parts prices.
5) "N/A" indicates, not applicable.

© Copyright 2014 Zoeller Co. All rights reserved.

# REPLACEMENT PARTS LIST FOR MODEL "E3282"

See page 7 for illustrations.

| | | | MODELS: E3282-A | E3282-A | E3282-B | E3282-C | E3282-D | E3282-E | E3282-F |
|---|---|---|---|---|---|---|---|---|---|
| REF. NO. | DESCRIPTION | QTY | NOTES | 10/87 WT thru 5/92 | 6/92 thru 11/92 | 12/92 thru 9/94 | 10/94 thru 9/01 | 10/01 thru 5/10 | 6/10 thru Current |
| 1 | • Handle | 1 | | 217069 | 217069 | 217069 | 217069 | 217069 | 217069 |
| 2 | Cover & Handle | 1 | | 005365 | 005365 | 005365 | 009662 | 009662 | 009662 |
| 3 | • Gasket, Case or Cover | 1 | | 012649 | 012649 | 012649 | 012649 | 012649 | 012649 |
| 4 | • Wire Pkg. | 1 | | 004756 | 004756 | 004756 | 004756 | 004756 | 004756 |
| 5 | Capacitor & Clamp Asm. | 1 | | 002381 | 002381 | 002381 | 002381 | 002381 | 002381 |
| 6 | • Seal, Thru Wall Term | 3 | | 003402 | 003402 | 003402 | 003402 | 003402 | 003402 |
| 7 | Mtr. Hsg, Brg, Stator & Term | 1 | 3 | 005361 | 005361 | 005361 | 005361 | 005361 | 150955 |
| 8 | Bearing, Sleeve | 1 | | 001012 | 001012 | 001012 | 001012 | 001012 | N/A |
| | Bearing, Radial | 1 | | N/A | N/A | N/A | N/A | N/A | 006703 |
| 9 | Rotor (115V/230V)-GE | 1 | | 003167 | 003167 | 007978 | 007978 | 007978 | 150874 |
| | Rotor (115V/230V)-Emerson | 1 | | 003167 | 003167 | 007979 | 007979 | 007979 | N/A |
| 10 | Bearing, Lower | 1 | | 094106 | 094106 | 001013 | 001013 | 001013 | 010069 |
| 11 | • Seal, Mtr Hsg. | 1 | | 012648 | 012648 | 012648 | 012648 | 012648 | 012648 |
| 12 | Adapter | 1 | | 002357 | 002357 | 001003 | 001003 | 001003 | 001003 |
| 13 | • Seal, Shaft | 1 | | 019068 | 019068 | 019068 | 019068 | 019068 | 019068 |
| 14 | Impeller | 1 | | 002998 | 002998 | 002998 | 002998 | 002998 | 002998 |
| 15 | Pump Housing | 1 | | 217012 | 217012 | 217012 | 217012 | 217012 | 217012 |
| 16 | • Plug | 3 | | 034051 | 034051 | 034051 | 034051 | 034051 | 015023 |
| 17 | • Oil, Dielectric | 1 | | 003168 | 006065 | 006065 | 006065 | 006065 | 150609 |
| 18 | Flange Pkg. 2" | 1 | | 10-1305 | 10-1305 | 10-1305 | 10-1305 | 10-1305 | 10-1305 |
| | Flange Pkg. 3" | 1 | | 10-1306 | 10-1306 | 10-1306 | 10-1306 | 10-1306 | 10-1306 |
| 19 | Cover, Plate & Gasket | 1 | | N/A | 007652 | 007652 | 007652 | 007652 | 267051 |
| 20 | • Gasket, Case or Cover | 1 | | N/A | 014555 | 014555 | 014555 | 014555 | 014555 |
| 21 | Housing, Switch | 1 | | N/A | 006836 | 006836 | 009454 | 009454 | 009454 |
| 22 | Clamp, #60 SS Worm | 2 | | 004913 | 004913 | 004913 | 004913 | 004913 | 004913 |
| 23 | Strain Relief | 3 | 1 | 001770 | 001770 | 001770 | 001770 | 001770 | 001770 |
| 24 | • Seal Asm, Conduit | 1 | 1 | 005371 | 005371 | 005371 | 009643 | 009643 | 009643 |
| 25 | • Seal Asm, Conduit | 1 | 1 | 005372 | 005372 | 005372 | 009643 | 009643 | 009643 |
| 26 | Cordage, Conduit & Seals | 1 | | 005438 | 005438 | 005438 | 009656 | 009656 | 009656 |
| 27 | Conduit 6' | 1 | | 005252 | 005252 | 005252 | 005252 | 005252 | 005252 |
| 28 | Cordage & Terms | 1 | | 005354 | 005354 | 005354 | 005354 | 005354 | 005354 |
| 29 | • Screw, .25-20 x .75 HHMM-S | 8 | | 001916 | 001916 | 001916 | 001916 | 001916 | 001916 |
| 30 | • Screw, #6-32x.25" RHM SL STLGR | 4 | | 001877 | 001877 | 001877 | 001877 | 001877 | 001877 |
| 31 | • Screw, .313-18x1" HH CAP-SS | 4 | | 002608 | 002608 | 002608 | 002608 | 002608 | 002608 |
| 32 | • Screw, #10-24 x .375 RHM SL-SS | 4 | | 001883 | 001883 | 001883 | 001883 | 001883 | 001883 |
| 33 | • Washer, SS-1.25"ODx.562"IDx.078 | 2 | | 002115 | 002115 | 002115 | 002115 | 002115 | 002115 |
| 34 | • Screw, .5-13x2" HH CAP-SS | 2 | | 001909 | 001909 | 001909 | 001909 | 001909 | 001909 |
| 35 | • Screw, .25-20x1" HHM-SS | 1 | | 007790 | 007790 | 007790 | 007790 | 007790 | 007790 |
| 36 | Handle | 1 | | 267032 | 267032 | 267032 | 267032 | 267032 | 267032 |
| 37 | Retainer, Handle | 2 | | 267053 | 267053 | 267053 | 267053 | 267053 | 267053 |
| 40 | Junction Box Asm. | 1 | | 005435 | N/A | N/A | N/A | N/A | N/A |
| ¤ | Rebuild Kit | 1 | | 005362 | 008570 | 008571 | 009987 | 009987 | 150989 |

• Items included in Rebuild Kit. ¤ Not shown in illustration.

**NOTES:**

1) Strain Relief (Item 23) can be purchased separately, but is included with Cord, Terminal & Seal Assembly (Item 26) and with Seal, Cord Assembly (Items 24 and 25).
2) Mtr. Hsg., Brg., Stator & Term. (Item 7) are preassembled at the factory and must be replaced as a unit. Stator is permanently attached to the Motor Housing. Plug (Item 16); Seal, Thru Wall Term. (Item 6) and Bearing - Upper (Item 8) are replaceable.
3) When ordering Motor Housing, Bearing, Stator and Term. (Item 9) or Rotor (Item11) specify either GE or Emerson motor. GE motor can be identified by (4) holes spaced at 90° around the outside diameter of the stator. Emerson motor can be identified by (4) flat edges spaced at 90° around the outside diameter of the stator.
4) See FM0160 Parts Price Sheet for listing of parts prices.
5) "N/A" indicates, not applicable.

**DATE CODE OF MANUFACTURE FROM 12/70 to 12/88**

| 1st LETTER MONTH | | 2nd LETTER YEAR | | |
|---|---|---|---|---|
| M --- JAN. | T --- JULY | A --- 1971 | G --- 1977 | O --- 1983 |
| N --- FEB. | U --- AUG. | B --- 1972 | H --- 1978 | P --- 1984 |
| O --- MARCH | V --- SEPT. | C --- 1973 | I --- 1979 | R --- 1985 |
| P --- APRIL | W --- OCT. | D --- 1974 | J --- 1980 | S --- 1986 |
| R --- MAY | X --- NOV. | E --- 1975 | M --- 1981 | T --- 1987 |
| S --- JUNE | Y --- DEC. | F --- 1976 | N --- 1982 | U --- 1988 |

**NOTE:** Four digit (MMYY) date of mfg. used after June, 1988.
IE: MMYY = 0192 = Jan. 1992.

© Copyright 2014 Zoeller Co. All rights reserved.

## REPLACEMENT PARTS ILLUSTRATION FOR MODELS “M3282” and “D3282”

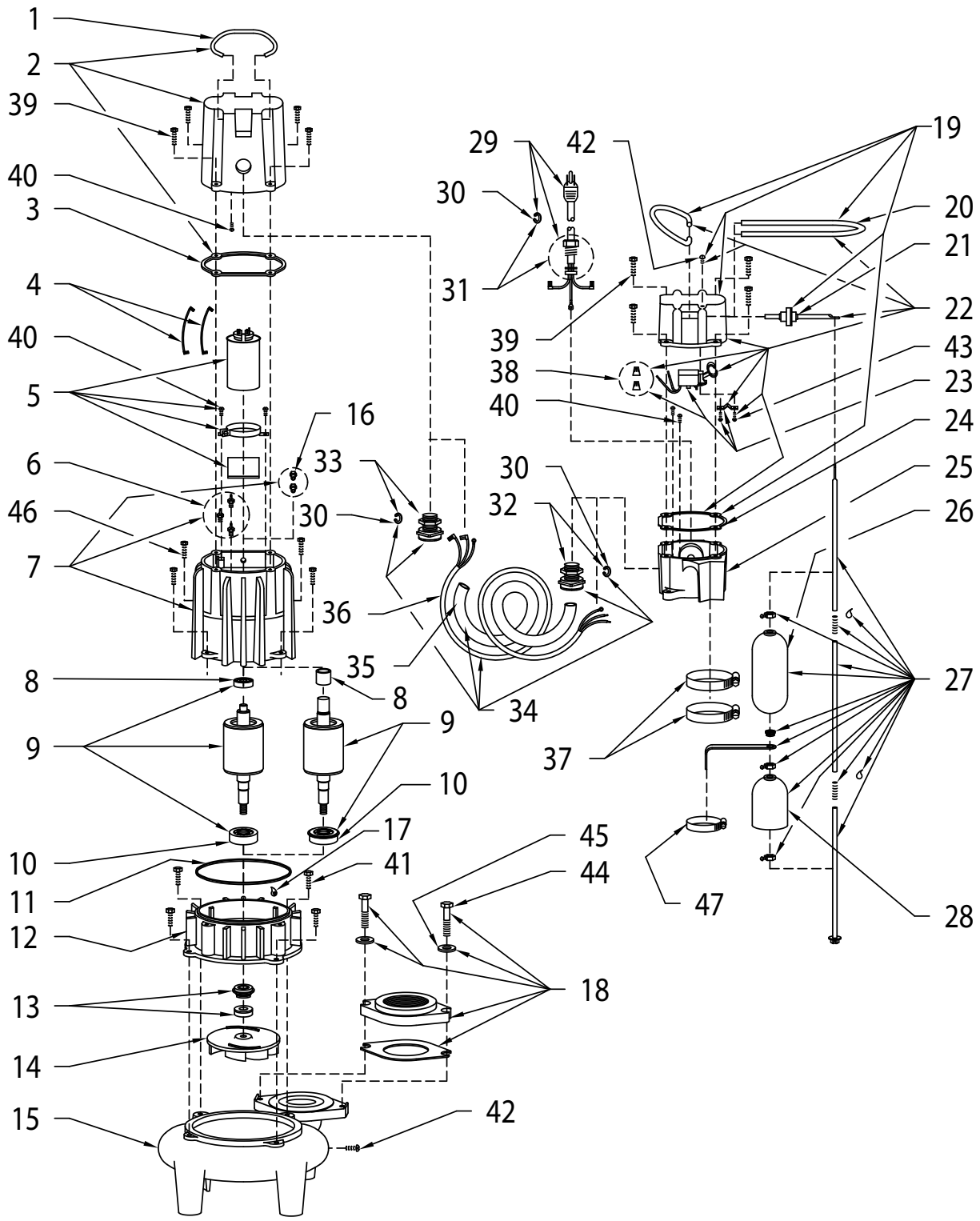


© Copyright 2014 Zoeller Co. All rights reserved.

## REPLACEMENT PARTS ILLUSTRATION FOR MODELS “N3282” and “E3282”

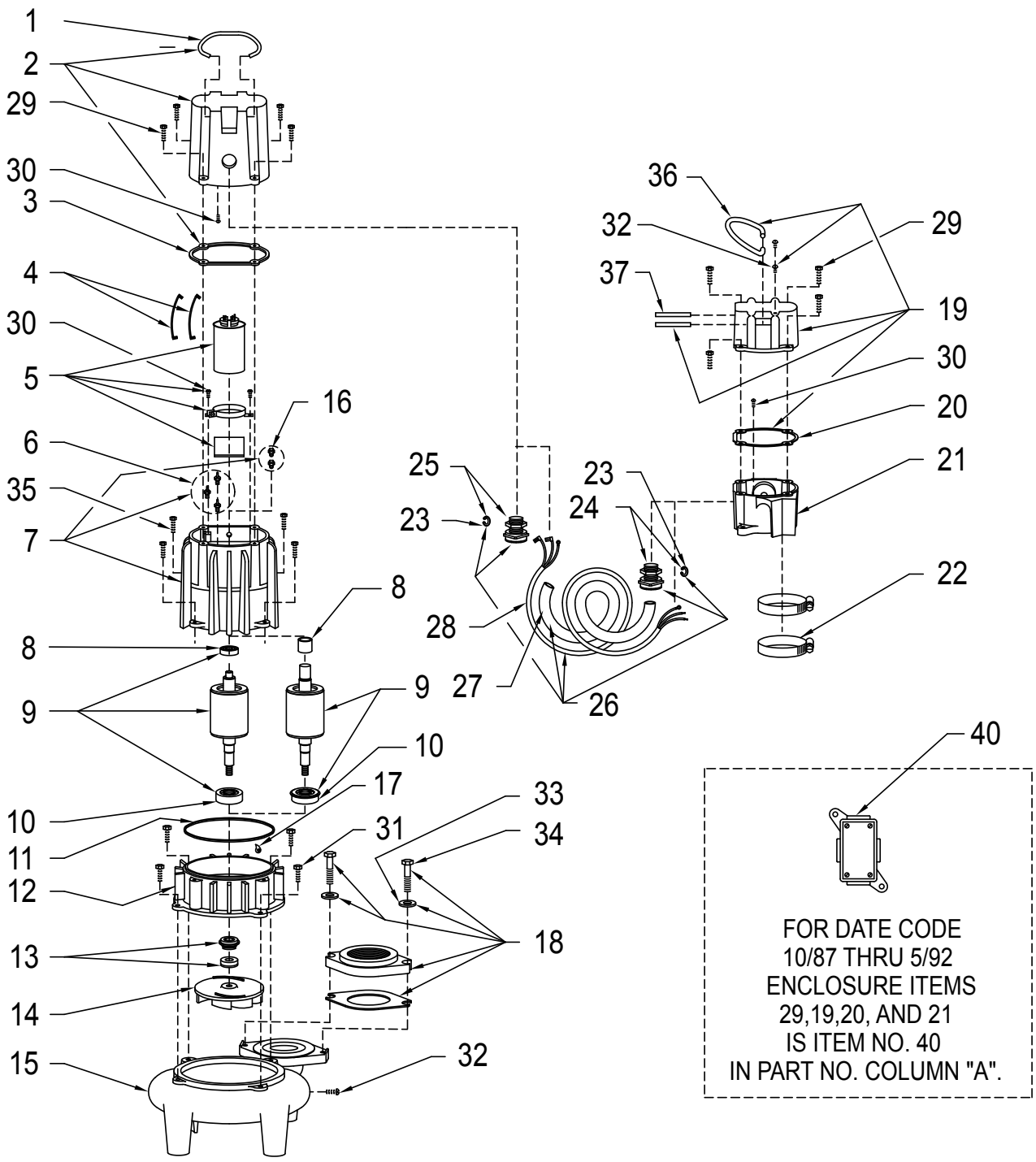


© Copyright 2014 Zoeller Co. All rights reserved.

# NOTES

ZOELLER®
PUMP COMPANY

**MAIL TO:** P.O. BOX 16347 • Louisville, KY 40256-0347
**SHIP TO:** 3649 Cane Run Road • Louisville, KY 40211-1961
(502) 778-2731 • 1 (800) 928-PUMP • FAX (502) 774-3624

***Your Peace of Mind is Our Top Priority®***

***visit our web site:***
***www.zoeller.com***

© Copyright 2014 Zoeller Co. All rights reserved.