Your Peace of Mind is Our Top Priority®

Product information presented here reflects conditions at time of publication. Consult factory regarding discrepancies or inconsistencies.

ZOELLER®

PUMP COMPANY

Zoeller Family of Water Solutions™

MAIL TO: *P.O. BOX 16347 • Louisville, KY 40256-0347*
SHIP TO: *3649 Cane Run Road • Louisville, KY 40211-1961*
(502) 778-2731 • 1 (800) 928-PUMP • FAX (502) 774-3624

SECTION: 6.10.345
FM1808
0314
Supersedes
1000

visit our web site:
www.zoeller.com

REPLACEMENT PARTS LIST FOR MODELS:

CF282 3PH AUTOMATIC 230V

Consult factory for all other models

TO ORDER REPLACEMENT PARTS:

PLEASE FURNISH THE FOLLOWING INFORMATION:

- Model Number.
- Part Number of Pump.
- Part Number and Description of part.

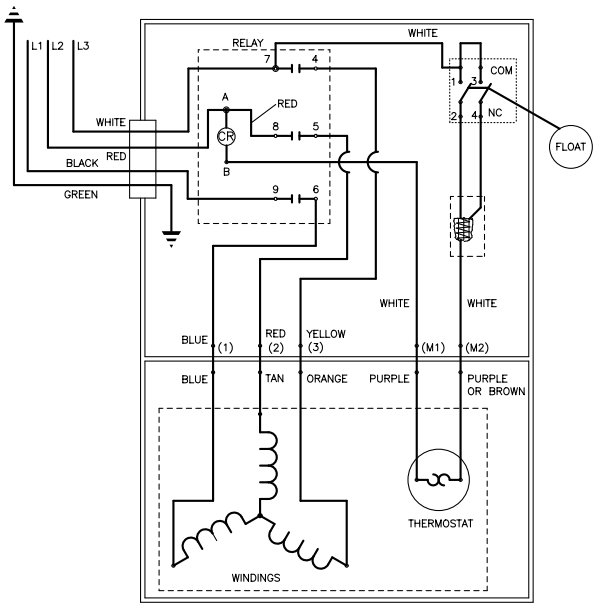

013071

WIRING DIAGRAM FOR MODELS
"CF282-A"
2/00 thru Current

© Copyright 2014 Zoeller Co. All rights reserved.

REPLACEMENT PARTS LIST FOR MODEL: “CF282”

See next page for illustration.

				MODELS:	CF282-A	CF282-B
REF NO.		DESCRIPTION	QTY	NOTES	02/00 thru 5/10	6/10 thru Current
1	•	Guard	1		001023	001023
2		Handle	1		217069	217069
3		Case Switch & Cd/230V/1Ph”282”	1	2	013211	013211
4	•	Arm & Seal Asm “160/180/290”	1		004745	004745
5		Case-Mach “160/180/280/290”	1	2	004614	004614
6	•	Gasket, Case/Cover	1		001011	001011
7	•	Wire Pkg (8) Wires	1		013212	013212
8		Float, Plastic	1		094039	094039
9		Guide Asm, Flt Rod	1		094048	094048
10	•	Screw, #10-24 X .375 RHM-SISS	2		001883	001883
11		Housing, Mtr.-&Str “282” GE	1	1	013213	150991
12		Rod, Asm, Flt	1		001043	150438
13		Bearing, Sleeve	1		001012	N/A
		Bearing, Radial			N/A	006703
14	•	Clamp, Strain Relief-Red	1		001770	001770
15		Cord Term and Seal Asm 230V/3PH	1	2	003761	003761
16	•	Seal, Cord-Asm & Strain Relief	1	2	094032	094032
17	•	Screw, #6-32 X .25 RHM Sl Tc Stlgr	4		001877	001877
18	•	Screw, .25-20 X .75 HHm-SS	4		001916	001916
19		Switch Asm “1670/180/290”	1		013214	013214
20	•	Screw, #6-32 X .438 Rhsltp “1” Stlzi	2		004644	004644
21		Relay 230/3PH	1		013069	013069
22		Bracket, relay	1		013070	013070
23	•	Nut, #6-32	1		006120	006120
24	•	Plug, Test-White	2		034090	034090
25	•	Seal, Thru Wall Term	5		003402	003402
26	•	Screw, .25-20 X 1” RHM-Sl Tc Stlgr	4		007790	007790
27		Rotor & Brg	1		009495	150875
28	•	Bearing, Lower Rotor	1		010069	010069
29	•	Seal, Mtr Hsg	1		001014	001014
30	•	Oil, Dielectric - (44 Oz Can)	1		003168	011066
31	•	Screw, .313-18 X 1’ HH Cap-SS	4		002608	002608
32		Adapter-Mach “280”	1		001003	001003
33	•	Seal, Shaft “282”, “284”	1		002430	002430
34		Impeller “282”	1		007063	007063
35	•	Screw, .5-13 X 2 HH Cap-SS	2		001909	001909
36	•	Washer, SS-1.25” OD X .562” ID X .078	2		002115	002115
37		Flange Pkg 2” Npt	1		10-1305	10-1305
		Flange Pkg 3” Npt			10-1306	10-1306
38		Housing, Pump-Mach	1		217012	217012
39		Washer, Stl.-.375” OD X. 150” ID X .032	2		002117	002117
40		Terminal, Adapter (1 FEMx (2) Mail F.	1		014210	014210
¤		Rebuild Kit “280”	1		013215	150990

• Items included in Rebuild Kit. ¤ Not Shown in Illustration.

NOTES:

1) Mtr. Hsg., Brg., Stator & Term. (Item 11) are preassembled at the factory and must be replaced as a unit. Stator is permanently attached to the motor Housing. Plug (Item 24); Seal, Thru Wall Term. (Item 25) and Bearing - Upper (Item 13) are replaceable.
2) If an "X" follows Model No., or Date Mfg. on brass ID tag, consult factory for ordering any parts.
3) See FM0160 Parts Price Sheet for listing of parts prices.
4) “NA” indicates, not applicable.

© Copyright 2014 Zoeller Co. All rights reserved.

REPLACEMENT PARTS ILLUSTRATION FOR MODEL: “CF282”

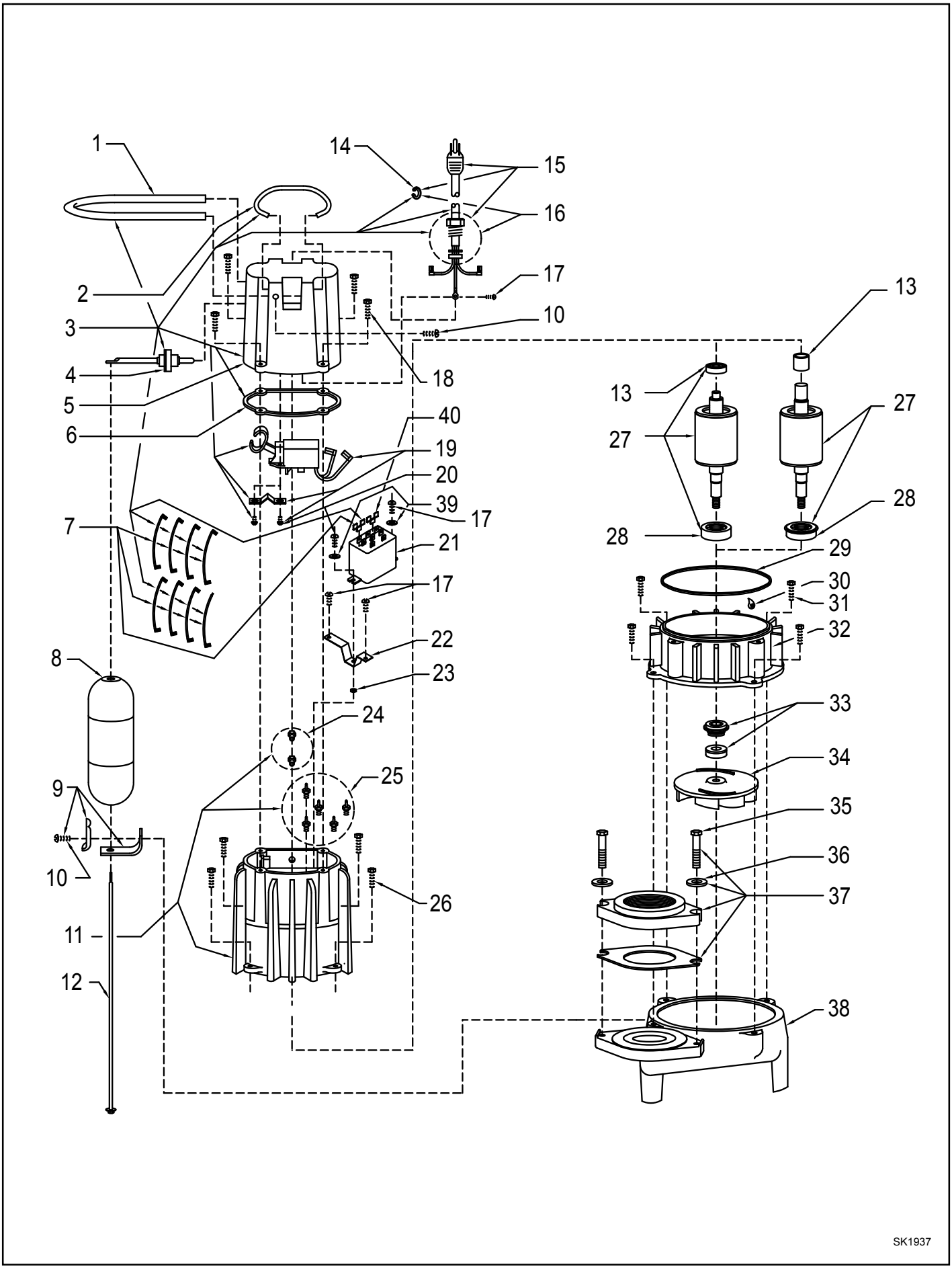

© Copyright 2014 Zoeller Co. All rights reserved.

NOTES:

ZOELLER®
PUMP COMPANY

MAIL TO: *P.O. BOX 16347 • Louisville, KY 40256-0347*
SHIP TO: *3649 Cane Run Road • Louisville, KY 40211-1961*
(502) 778-2731 • 1 (800) 928-PUMP • FAX (502) 774-3624

Your Peace of Mind is Our Top Priority®

visit our web site:
www.zoeller.com

© Copyright 2014 Zoeller Co. All rights reserved.