Your Peace of Mind is Our Top Priority®

Product information presented here reflects conditions at time of publication. Consult factory regarding discrepancies or inconsistencies.

ZOELLER®
PUMP COMPANY
Zoeller Family of Water Solutions™

MAIL TO: P.O. BOX 16347 • Louisville, KY 40256-0347
SHIP TO: 3649 Cane Run Road • Louisville, KY 40211-1961
(502) 778-2731 • 1 (800) 928-PUMP • FAX (502) 774-3624

SECTION: 6.10.342
FM1135
0314
Supersedes
0911

visit our web site:
www.zoeller.com

REPLACEMENT PARTS LIST FOR MODELS:

H282 AUTOMATIC 200V/1PH
I282 NONAUTOMATIC 200V/1PH
J282 NONAUTOMATIC 200V/3PH
F282 NONAUTOMATIC 230V/3PH
G282 NONAUTOMATIC 460V/3PH
BA282 NONAUTOMATIC 575V/3PH

Consult factory for all other models

TO ORDER REPLACEMENT PARTS:

PLEASE FURNISH THE FOLLOWING INFORMATION:

- Model Number.
- Part Number of Pump.
  (If manufactured prior to June 1988, give 2 letter date code following model number.
- Part Number and Description of part.

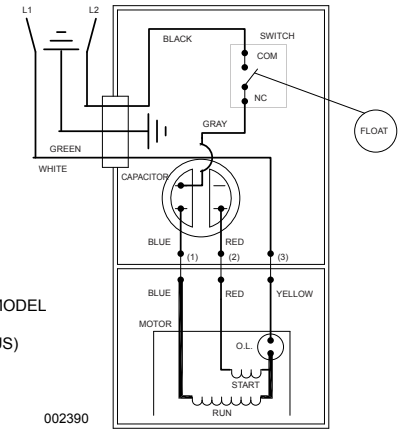

WIRING DIAGRAM FOR MODEL
"H282-A"
11/81 (XM) thru 8/86 (US)

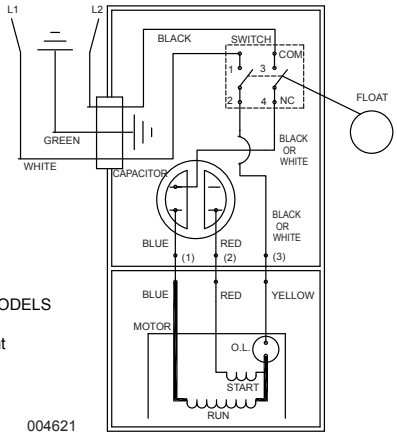

WIRING DIAGRAM FOR MODELS
"H282-B,C, and D"
9/86 (VS) thru Current

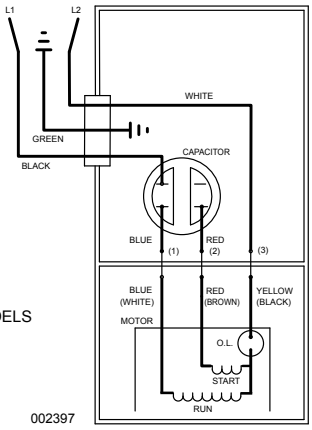

WIRING DIAGRAM FOR MODELS
"I282" All Revisions
11/81 (XM) thru Current

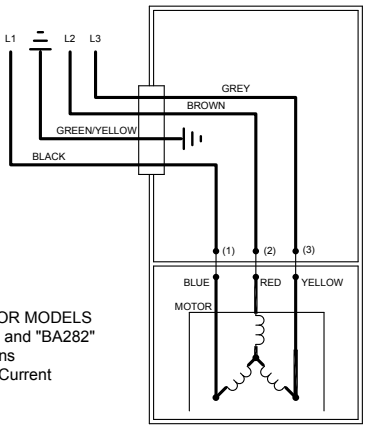

WIRING DIAGRAM FOR MODELS
"F282", "J282", "G282" and "BA282"
All Revisions
11/81 (XM) thru Current

© Copyright 2014 Zoeller Co. All rights reserved.

REPLACEMENT PARTS LIST FOR MODEL “H282”

See page 6 for illustration.

				MODEL: H282-A	H282-B	H282-C	H282-D
REF. NO.	DESCRIPTION	QTY	NOTES	11/81(XM) thru 8/86 (US)	9/86 (VS) thru 12/92	1/93 thru 5/10	6/10 thru Current
1	Case Switch & Cord 200V/1Ph ”282”	1	2,4	006932	006932	006932	006932
2	• Guard	1		001023	001023	001023	001023
3	Case-Mach	1	2,4	004614	004614	004614	004614
4	• Arm & Seal Asm	1	2	002379	004745	004745	004745
5	• Gasket, Case/Cover	1		001011	001011	001011	001011
6	Switch Asm	1	2	002380	004755	004755	004755
7	• Wire Pkg	1		003165	004756	004756	004756
8	Relay 200V/1Ph G1 (&G5)	0		NA	NA	NA	NA
9	Capacitor & Clamp Asm/20uf 370V	1		002381	002381	002381	002381
10	Float, Plastic	1		094039	094039	094039	094039
11	Guide Asm, Flt Rod	1		094048	094048	094048	094048
12	Rod Asm, Flt	1		001043	001043	001043	150438
13	Housing, Mtr & Str 200V/1Ph/.5HP GE	1	1,3,6	007601	007601	007601	150923
	Housing, Mtr & Str 200V/1Ph/.5HP EMD	1	1,3,6	150247	150247	007602	NA
14	Bearing, Sleeve	1		001012	001012	001012	NA
	• Bearing, Radial			NA	NA	NA	006703
15	• Handle	1		217069	217069	217069	217069
16	Cord Term & Seal	1	2,4	006929	006930	006930	006930
17	• Clamp, Strain Relief	1	4	001770	001770	001770	001770
18	• Seal, Cord-Asm & Strain Relief	1	4	094032	094032	094032	094032
19	• Plug, Test-White	2		034090	034090	034090	034090
20	• Seal, Thru Wall Term	3		003402	003402	003402	003402
21	Rotor & Brg 115/230V “282” GE	1	6	003167	003167	007978	150874
	Rotor & Brg 115/230V “282” EMD			005540	005540	007979	NA
22	• Bearing, Radial	1		094106	094106	001013	010069
23	• Seal, Mtr Hsg	1		001014	001014	001014	001014
24	• Oil, Dielectric	1		003168	003168	003168	011066
25	Adapter-Mach “280”	1		002357	002357	001003	001003
26	• Seal, Shaft-Asm	1		002496	002496	002430	002430
27	Flange Pkg 2" NPT (Use 10-1305)	1		10-1305	10-1305	10-1305	10-1305
	Flange Pkg 3" NPT (Use 10-1306)			10-1306	10-1306	10-1306	10-1306
28	Impeller “282”	1		002998	002998	002998	002998
29	Housing, Pump-Mach	1		217012	217012	217012	217012
30	• Screw, #10-24 X.375 RHM-SL SS	2		001883	001883	001883	001883
31	• Screw, #6-32x.25 RHM Sl Tc Stlgr	6		001877	001877	001877	001877
32	• Screw, .25-20x.75 HHm-SS	4		001916	001916	001916	001916
33	• Screw, #6-32x.438 Rhsltp “1” Stlzi	2		001877	004644	004644	004644
34	• Screw, .5-13 X 2 HH Cap-SS	2		001909	001909	001909	001909
35	• Washer, Flat SS - 1/2D Standard	2		002115	002115	002115	002115
36	• Screw, .313-18 X 1" HH Cap-SS	4		002608	002608	002608	002608
37	• Screw, .25-20 X 1" HHm-SS	4		007790	007790	007790	007790
¤	Rebuild Kit “280”	1		004758	004758	007980	019647

• Items included in Rebuild Kit. ¤ Not shown in illustration.

NOTES:

1) Motor housing, bearing, stator & terminal are preassembled at the factory and must be replaced as a unit. Stator is permanently attached to motor housing. Plug, seal, thru wall terminal and upper bearing are replaceable.
2) When ordering these parts, customer must identify if switch is a General Electric switch.
3) If an “X” follows Model No. or Date Mfg. on brass ID tag, consult factory for ordering of this part.
4) See FM0160 Parts Price Sheet for listing of parts prices.
5) “N/A” indicates, not applicable.
6) When ordering motor housing, bearing, stator and term. or rotor, specify either GE or Emerson motor. GE motor can be identified by (4) holes spaced at 90° around the outside diameter of the stator. Emerson motor can be identified by (4) flat edges spaced at 90° around the outside diameter of the stator.

© Copyright 2014 Zoeller Co. All rights reserved.

REPLACEMENT PARTS LIST FOR MODEL "I282"

See page 7 for illustration.

				MODEL: I282-A	I282-B	I282-C	I282-D
REF. NO.	DESCRIPTION	QTY	NOTES	11/81(XM) thru 8/86 (US)	9/86 (VS) thru 12/92	1/93 thru 5/10	6/10 thru Current
1	Cover & Cordage 200V/1Ph "282"	1	3	007073	007073	007073	007073
2	Cover-Mach Std Cd	1	3	001077	001077	001077	001077
3	• Gasket, Case/Cover	1		001011	001011	001011	001011
4	• Wire Pkg	1		003165	004756	004756	004756
5	Capacitor & Clamp Asm/20uf 370V	1		002381	002381	002381	002381
6	Housing, Mtr & Str 200V/1Ph/.5HP GE	1	1,2	007601	007601	007601	150923
	Housing, Mtr & Str 200V/1Ph/.5HP EMD	1	1,2	150247	150247	007602	NA
7	Bearing, Sleeve	1		001012	001012	001012	NA
	• Bearing, Radial			NA	NA	NA	006703
8	• Handle	1		217069	217069	217069	217069
9	Cord Term & Seal	1	3	007071	007071	007071	007071
10	• Clamp, Strain Relief	1	3	001770	001770	001770	001770
11	• Seal, Cord-Asm & Strain Relief	1	3	094032	094032	094032	094032
12	• Plug, Test-White	2		034090	034090	034090	034090
13	• Seal, Thru Wall Term	3		003402	003402	003402	003402
14	Rotor & Brg 115/230V "282" GE	1	1,2	003167	003167	007978	150874
	Rotor & Brg 115/230V "282" EMD			005540	005540	007979	NA
15	• Bearing, Radial	1		094106	094106	001013	010069
16	• Seal, Mtr Hsg	1		001014	001014	001014	001014
17	• Oil, Dielectric-(44 Oz)	1		003168	003168	003168	011066
18	Adapter-Mach "280"	1		002357	002357	001003	001003
19	• Seal, Shaft-Asm	1		002496	002496	002430	002430
20	Flange Pkg 2" NPT (Use 10-1305)	1		10-1305	10-1305	10-1305	10-1305
	Flange Pkg 3" NPT (Use 10-1306)			10-1306	10-1306	10-1306	10-1306
21	Impeller "282"	1		002998	002998	002998	002998
22	Housing, Pump-Mach	1		217012	217012	217012	217012
23	• Screw, #6-32x.25 RHM Sl Tc Stlgr	1		001877	001877	001877	001877
24	• Screw, #10-24x.375 RHM-SL SS	1		001883	001883	001883	001883
25	• Screw, .25-20x.75 HHm-SS	4		001916	001916	001916	001916
26	• Screw, .5-13x2 HH Cap-SS	2		001909	001909	001909	001909
27	• Washer, Flat SS - 1/2D Standard	2		002115	002115	002115	002115
28	• Screw, .313-18x1" HH Cap-SS	4		002608	002608	002608	002608
29	• Screw, .25-20x1" HHm-SS	4		007790	007790	007790	007790
¤	Rebuild Kit "280"	1		003170	004758	007980	019648

• Items included in Rebuild Kit. ¤ Not shown in illustration.

NOTES:

1) Motor housing, bearing, stator & terminal are preassembled at the factory and must be replaced as a unit. Stator is permanently attached to motor housing. Plug, seal, thru wall terminal and upper bearing are replaceable.
2) When ordering these parts, customer must identify if switch is a General Electric switch.
3) If an "X" follows Model No. or Date Mfg. on brass ID tag, consult factory for ordering of this part.
4) See FM0160 Parts Price Sheet for listing of parts prices.
5) "N/A" indicates, not applicable.
6) When ordering motor housing, bearing, stator and term. or rotor, specify either GE or Emerson motor. GE motor can be identified by (4) holes spaced at 90° around the outside diameter of the stator. Emerson motor can be identified by (4) flat edges spaced at 90° around the outside diameter of the stator.

DATE CODE OF MANUFACTURE FROM 12/70 to 12/88

1st LETTER MONTH		2nd LETTER YEAR		
M --- JAN.	T --- JULY	A --- 1971	G --- 1977	O --- 1983
N --- FEB.	U --- AUG.	B --- 1972	H --- 1978	P --- 1984
O --- MARCH	V --- SEPT.	C --- 1973	I --- 1979	R --- 1985
P --- APRIL	W --- OCT.	D --- 1974	J --- 1980	S --- 1986
R --- MAY	X --- NOV.	E --- 1975	M --- 1981	T --- 1987
S --- JUNE	Y --- DEC.	F --- 1976	N --- 1982	U --- 1988

NOTE: Four digit (MMYY) date of mfg. used after June, 1988.
IE: MMYY = 0192 = Jan. 1992.

© Copyright 2014 Zoeller Co. All rights reserved.

REPLACEMENT PARTS LIST FOR MODEL “J282”

See page 8 for illustration.

				MODEL: J282-A	J282-B	J282-C	J282-D
REF. NO.	DESCRIPTION	QTY	NOTES	11/81(XM) thru 8/86 (US)	9/86 (VS) thru 12/92	1/93 thru 5/10	6/10 thru Current
1	• Handle	1		217069	217069	217069	217069
2	Cover & Cord 3Ph “280”	1	3	003760	003760	003760	003760
3	Cover-Mach Std Cd or 3Ph	1	3	001077	001077	001077	001077
4	• Gasket, Case/Cover	1		001011	001011	001011	001011
5	Housing, Mtr & Str 3Ph/.5HP GE	1	1,2	007662	007662	007662	150950
	Housing, Mtr & Str 3Ph/.5HP EMD	1	1,2	150249	150249	150243	NA
6	Bearing, Sleeve	1		001012	001012	001012	NA
	• Bearing, Radial			NA	NA	NA	006703
7	• Clamp, Strain Relief	1	3	001770	001770	001770	001770
8	Cord Term & Seal	1	3	003761	003761	003761	003761
9	• Seal, Cord-Asm & Strain Relief	1	3	094032	094032	094032	094032
10	• Plug, Test-White	2		034090	034090	034090	034090
11	• Seal, Thru Wall Term	3		003402	003402	003402	003402
12	Rotor & Brg Asm 230/460V/3Ph/.5HP GE	1	2	007062	007062	009495	150875
	Rotor & Brg Asm 230/460V/3Ph/.5HP EMD			007661	007661	009496	NA
13	• Bearing, Radial	1		094106	094106	001013	010069
14	• Seal, Mtr Hsg	1		001014	001014	001014	001014
15	• Oil, Dielectric-(44 Oz)	1		003168	003168	003168	011066
16	Adapter-Mach “280”	1		002357	002357	001003	001003
17	• Seal, Shaft-Asm	1		002496	002496	002430	002430
18	Impeller Asm 3Ph “282”	1		007063	007063	007063	007063
19	Flange Pkg 2" NPT (Use 10-1305)	1		10-1305	10-1305	10-1305	10-1305
	Flange Pkg 3" NPT (Use 10-1306)			10-1306	10-1306	10-1306	10-1306
20	Housing, Pump-Mach	1		217012	217012	217012	217012
21	• Screw, #6-32x.25RHM Sl Tc Stlgr	1		001877	001877	001877	001877
22	• Screw, .25-20x.75 HHm-SS	4		001916	001916	001916	001916
23	• Screw, .313-18x1" HH Cap-SS	4		002608	002608	002608	002608
24	• Screw, .5-13x2 HH Cap-SS	2		001909	001909	001909	001909
25	• Washer, Flat SS - 1/2D Standard	2		002115	002115	002115	002115
26	• Screw, #10-24x.375 RHM-SL SS	1		001883	001883	001883	001883
27	• Screw, .25-20x1" HHm-SS	4		007790	007790	007790	007790
28	• Screw, Acorn	1		004351	004351	004351	004351
¤	Rebuild Kit “280”	1		003170	004758	010077	019648

• Items included in Rebuild Kit. ¤ Not shown in illustration.

NOTES:

1) Motor housing, bearing, stator & terminal are preassembled at the factory and must be replaced as a unit. Stator is permanently attached to motor housing. Plug, seal, thru wall terminal and upper bearing are replaceable.
2) When ordering these parts, customer must identify if switch is a General Electric switch.
3) If an “X” follows Model No. or Date Mfg. on brass ID tag, consult factory for ordering of this part.
4) See FM0160 Parts Price Sheet for listing of parts prices.
5) “N/A” indicates, not applicable.
6) When ordering motor housing, bearing, stator and term. or rotor, specify either GE or Emerson motor. GE motor can be identified by (4) holes spaced at 90° around the outside diameter of the stator. Emerson motor can be identified by (4) flat edges spaced at 90° around the outside diameter of the stator.

© Copyright 2014 Zoeller Co. All rights reserved.

REPLACEMENT PARTS LIST FOR MODELS “F282”, “G282” & "BA282"

See page 8 for illustration.

				MODEL: F282-A	F282-B	F282-C	F282-D		G282-A	G282-B	G282-C	G282-D		BA282-A	BA282-B
REF. NO.	DESCRIPTION	QTY	NOTES	11/81(XM) thru 8/86 (US)	9/86 (VS) thru 12/92	1/93 thru 5/10	6/10 thru Current		11/81(XM) thru 8/86 (US)	9/86 (VS) thru 12/92	1/93 thru 5/10	6/10 thru Current		3/11 thru 5/10	6/10 thru Current
1	• Handle	1		217069	217069	217069	217069		217069	217069	217069	217069		217069	217069
2	Cover & Cord 3Ph “280”	1	3	003760	003760	003760	003760		003760	003760	003760	003760		003760	003760
3	Cover-Mach Std Cd or 3Ph	1	3	001077	001077	001077	001077		001077	001077	001077	001077		001770	001770
4	• Gasket, Case/Cover	1		001011	001011	001011	001011		001011	001011	001011	001011		001011	001011
5	Housing, Mtr & Str 3Ph/.5HP GE	1	1,2	007662	007662	007662	150951		007662	007662	007662	150952		150841	150953
	Housing, Mtr & Str 3Ph/.5HP EMD			150250	150250	007663	NA		150251	150251	150245	NA		NA	NA
6	Bearing, Sleeve	1		001012	001012	001012	NA		001012	001012	001012	NA		001012	001012
	• Bearing, Radial			NA	NA	NA	006703		NA	NA	NA	006703		NA	006703
7	• Clamp, Strain Relief	1	3	001770	001770	001770	001770		001770	001770	001770	001770		001770	001770
8	Cord Term & Seal	1	3	003761	003761	003761	003761		003761	003761	003761	003761		003761	003761
9	• Seal, Cord-Asm & Strain Relief	1	3	094032	094032	094032	094032		094032	094032	094032	094032		094032	094032
10	• Plug, Test-White	2		034090	034090	034090	034090		034090	034090	034090	034090		034090	034090
11	• Seal, Thru Wall Term	3		003402	003402	003402	003402		003402	003402	003402	003402		003402	003402
12	Rotor & Brg Asm 230/460V/3Ph/.5HP GE	1	2	007062	007062	009495	150875		007062	007062	009495	150875		009495	150875
	Rotor & Brg Asm 230/460V/3Ph/.5HP EMD			007661	007661	009496	NA		007661	007661	009496	NA		NA	NA
13	• Bearing, Radial	1		094106	094106	001013	001013		094106	094106	001013	001013		001013	010069
14	• Seal, Mtr Hsg	1		001014	001014	001014	001014		001014	001014	001014	001014		001014	001014
15	• Oil, Dielectric	1		003168	003168	003168	011066		003168	003168	003168	011066		003168	011066
16	Adapter-Mach “280”	1		002357	002357	001003	001003		002357	002357	001003	001003		002357	002357
17	• Seal, Shaft-Asm	1		002496	002496	002430	002430		002496	002496	002430	002430		002430	002430
18	Impeller Asm 3Ph “282”	1		007063	007063	007063	007063		007063	007063	007063	007063		007063	007063
19	Flange Pkg 2" NPT (Use 10-1305)	1		10-1305	10-1305	10-1305	10-1305		10-1305	10-1305	10-1305	10-1305		10-1305	10-1305
	Flange Pkg 3" NPT (Use 10-1306)			10-1306	10-1306	10-1306	10-1306		10-1306	10-1306	10-1306	10-1306		10-1306	10-1306
20	Housing, Pump-Mach	1		217012	217012	217012	217012		217012	217012	217012	217012		217012	217012
21	• Screw, #6-32x.25RHM Sl Tc Stlgr	1		001877	001877	001877	001877		001877	001877	001877	001877		001877	001877
22	• Screw, .25-20x.75 HHm-SS	4		001916	001916	001916	001916		001916	001916	001916	001916		001916	001916
23	• Screw, .313-18x1" HH Cap-SS	4		002608	002608	002608	002608		002608	002608	002608	002608		002608	002608
24	• Screw, .5-13x2 HH Cap-SS	2		001909	001909	001909	001909		001909	001909	001909	001909		001909	001909
25	• Washer, Flat SS - 1/2D Standard	2		002115	002115	002115	002115		002115	002115	002115	002115		002115	002115
26	• Screw, #10-24x.375 RHM-SL SS	1		001883	001883	001883	001883		001883	001883	001883	001883		001883	001883
27	• Screw, .25-20x1" HHm-SS	4		007790	007790	007790	007790		007790	007790	007790	007790		007790	007790
28	• Nut, Acorn	1		004351	004351	004351	004351		004351	004351	004351	004351		004351	004351
¤	Rebuild Kit “280”	1		003170	004758	010077	019648		003170	004758	003170	019648		010077	019648

• Items included in Rebuild Kit. ¤ Not shown in illustration.

NOTES:

1) Motor housing, bearing, stator & terminal are preassembled at the factory and must be replaced as a unit. Stator is permanently attached to motor housing. Plug, seal, thru wall terminal and upper bearing are replaceable.
2) When ordering these parts, customer must identify if switch is a General Electric switch.
3) If an “X” follows Model No. or Date Mfg. on brass ID tag, consult factory for ordering of this part.
4) See FM0160 Parts Price Sheet for listing of parts prices.
5) “N/A” indicates, not applicable.
6) When ordering motor housing, bearing, stator and term. or rotor, specify either GE or Emerson motor. GE motor can be identified by (4) holes spaced at 90° around the outside diameter of the stator. Emerson motor can be identified by (4) flat edges spaced at 90° around the outside diameter of the stator.

DATE CODE OF MANUFACTURE FROM 12/70 to 12/88

1st LETTER MONTH		2nd LETTER YEAR		
M --- JAN.	T --- JULY	A --- 1971	G --- 1977	O --- 1983
N --- FEB.	U --- AUG.	B --- 1972	H --- 1978	P --- 1984
O --- MARCH	V --- SEPT.	C --- 1973	I --- 1979	R --- 1985
P --- APRIL	W --- OCT.	D --- 1974	J --- 1980	S --- 1986
R --- MAY	X --- NOV.	E --- 1975	M --- 1981	T --- 1987
S --- JUNE	Y --- DEC.	F --- 1976	N --- 1982	U --- 1988

NOTE: Four digit (MMYY) date of mfg. used after June, 1988.
IE: MMYY = 0192 = Jan. 1992.

© Copyright 2014 Zoeller Co. All rights reserved.

REPLACEMENT PARTS ILLUSTRATION FOR MODELS “H282”

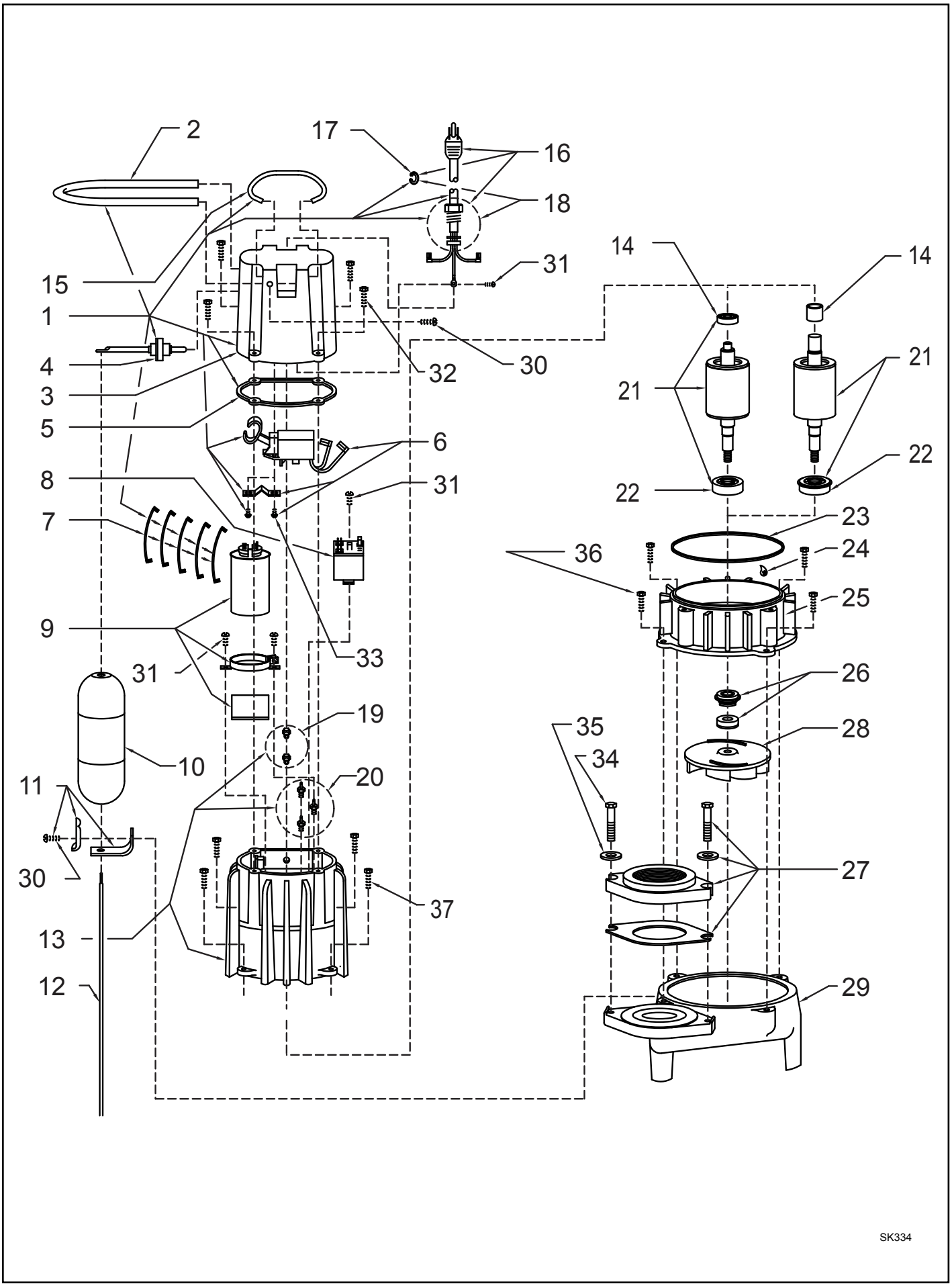

© Copyright 2014 Zoeller Co. All rights reserved.

REPLACEMENT PARTS ILLUSTRATION FOR MODELS “I282”

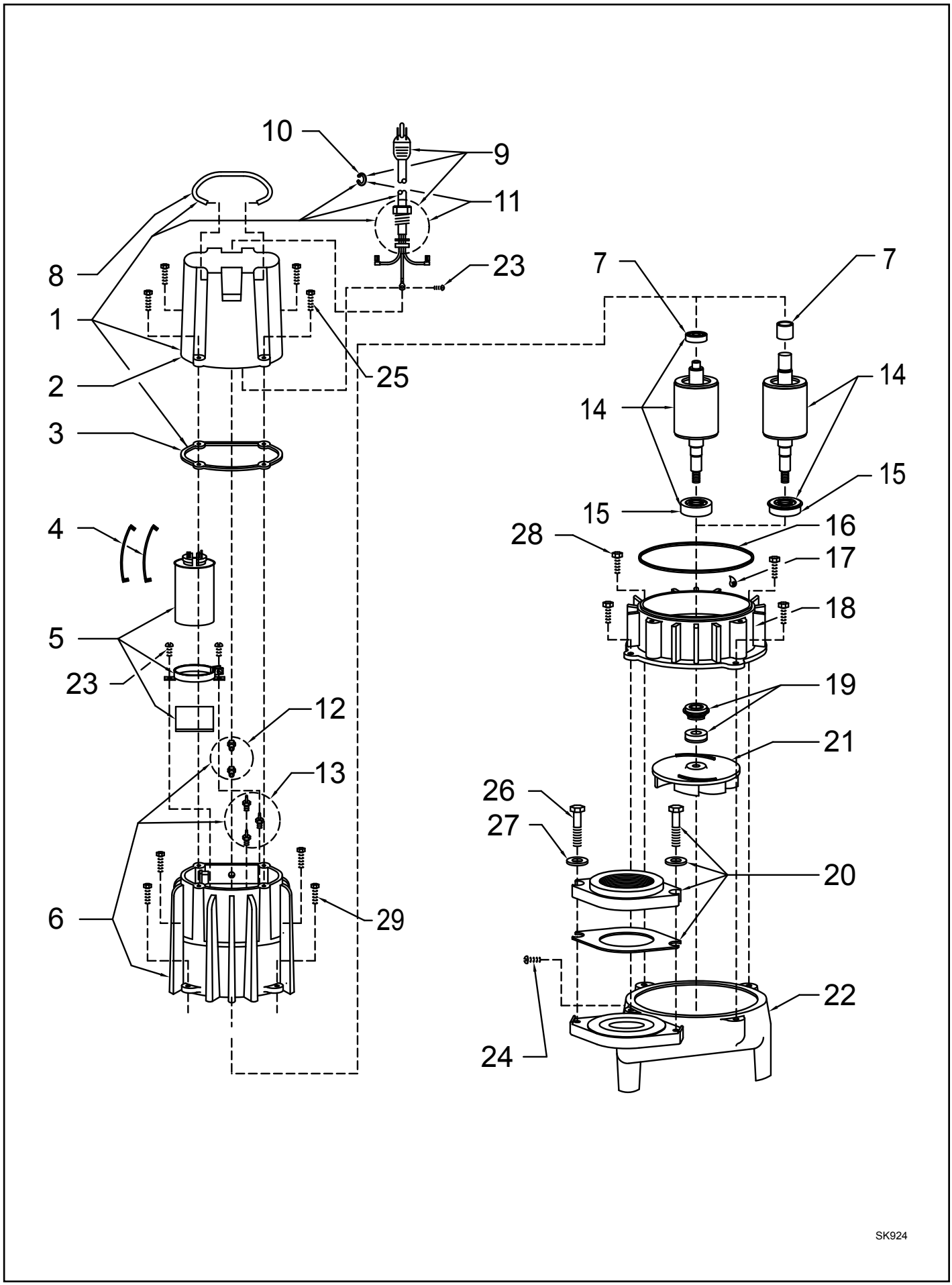

© Copyright 2014 Zoeller Co. All rights reserved.

REPLACEMENT PARTS ILLUSTRATION FOR MODELS “J282", "F282", "G282”, & "BA282"

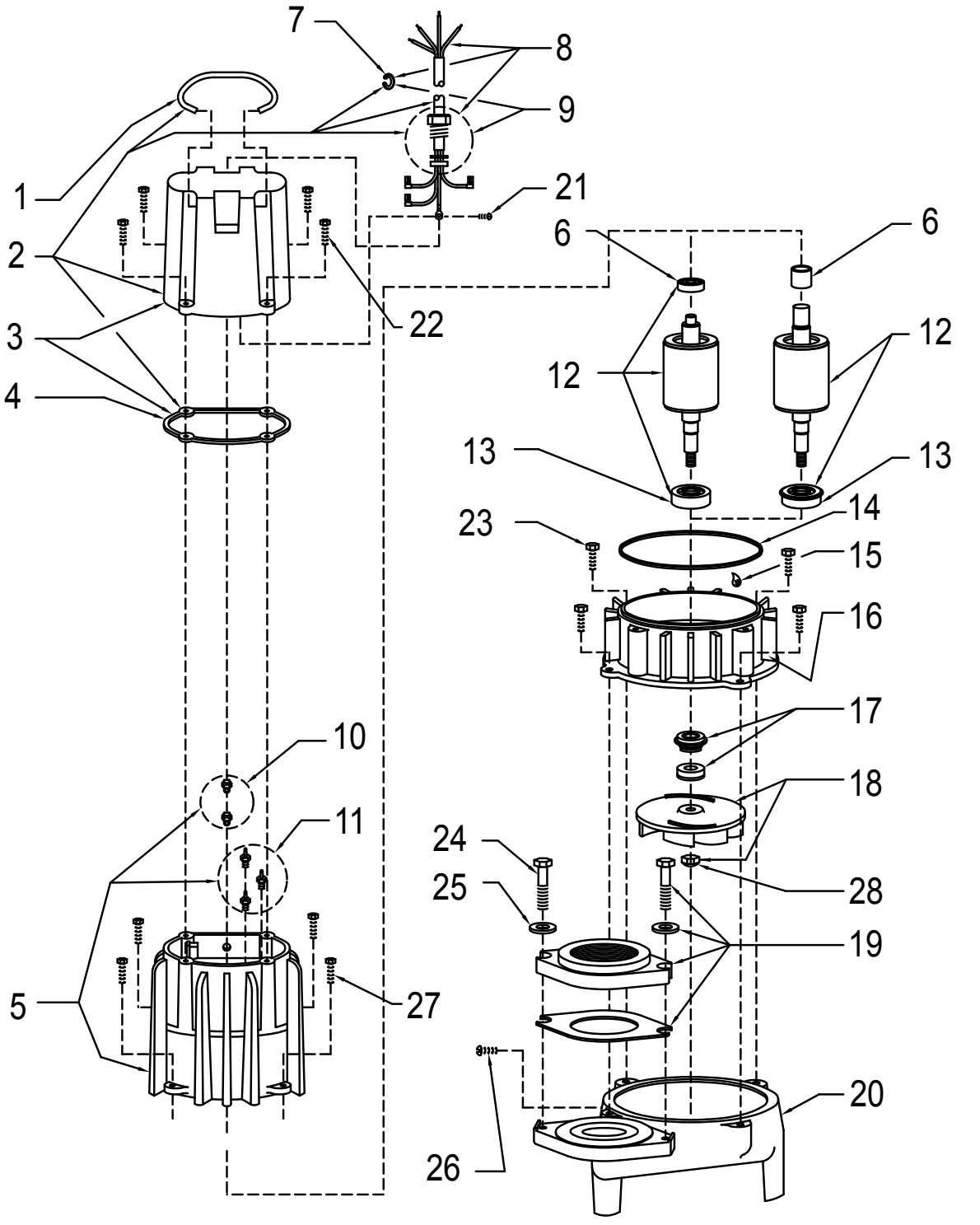

ZOELLER®
PUMP COMPANY

MAIL TO: P.O. BOX 16347 • Louisville, KY 40256-0347
SHIP TO: 3649 Cane Run Road • Louisville, KY 40211-1961
(502) 778-2731 • 1 (800) 928-PUMP • FAX (502) 774-3624

Your Peace of Mind is Our Top Priority®

visit our web site:
www.zoeller.com

© Copyright 2014 Zoeller Co. All rights reserved.