Your Peace of Mind is Our Top Priority®

Product information presented here reflects conditions at time of publication. Consult factory regarding discrepancies or inconsistencies.

ZOELLER®
PUMP COMPANY
Zoeller Family of Water Solutions™

MAIL TO: *P.O. BOX 16347 • Louisville, KY 40256-0347*
SHIP TO: *3649 Cane Run Road • Louisville, KY 40211-1961*
(502) 778-2731 • 1 (800) 928-PUMP • FAX (502) 774-3624

SECTION: 2.50.050
FM1530
0214
Supersedes
1009

visit our web site: www.zoeller.com

*SIMPLEX 840 GRINDER SYSTEM

INDOOR PREPACKAGED

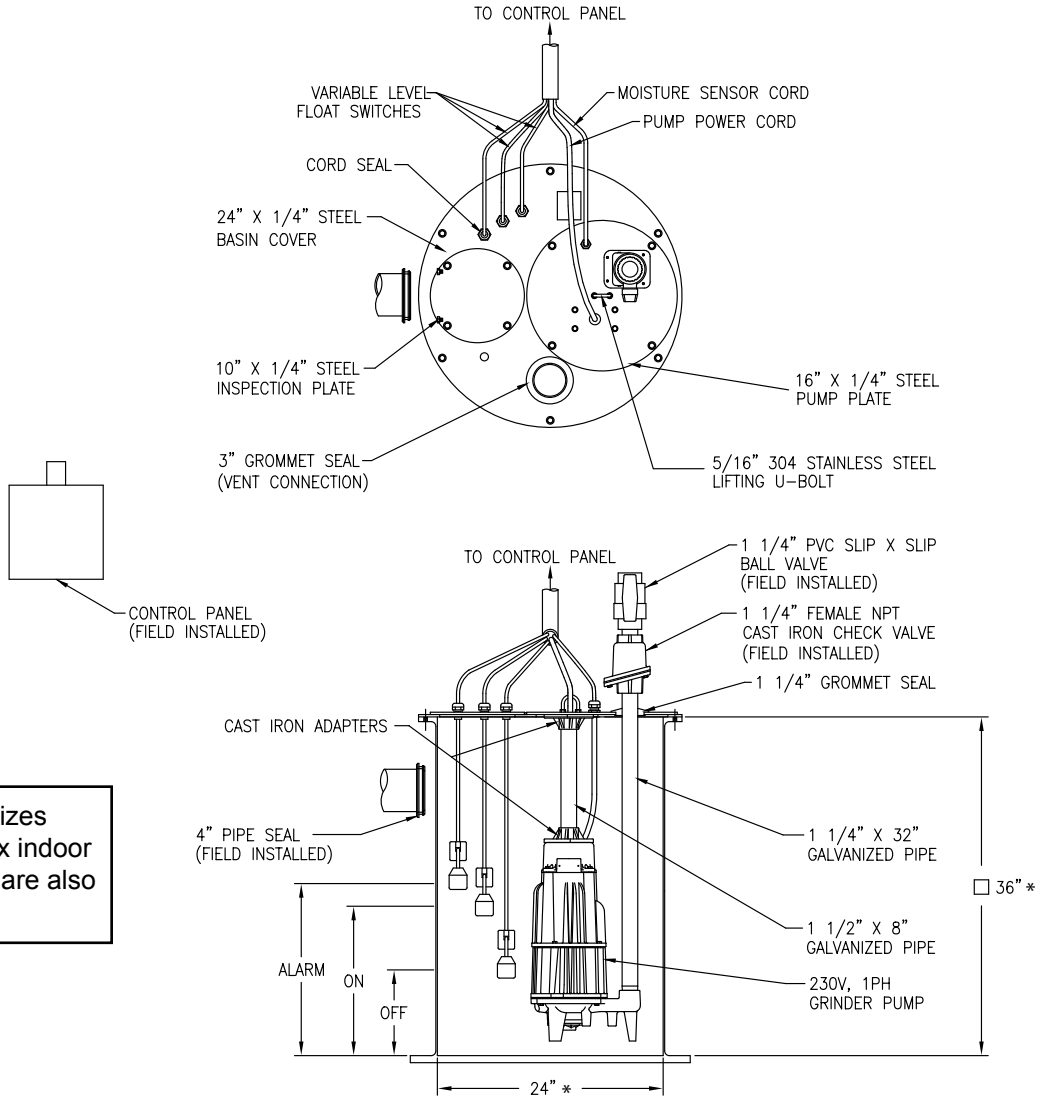

SK1695

* Optional sizes and duplex indoor packages are also available

Complete System As Shown Above Includes:

Qty.	Part No.	Description
1	840-0004	230 Volt, 1 Ph, 2 HP Grinder Pump
1	10-0393	NEMA 4X Simplex Control Panel with Automatic Reversing (Not Shown)
1	10-0347	Switch Assembly (3)
1	32-0005	Basin Assembly - 24" X 36"

Approximate Weight: 275 lbs.

© Copyright 2014 Zoeller Co. All rights reserved.

SIMPLEX 840 GRINDER SYSTEM

P/N 920-0006 OUTDOOR FIELD ASSEMBLED

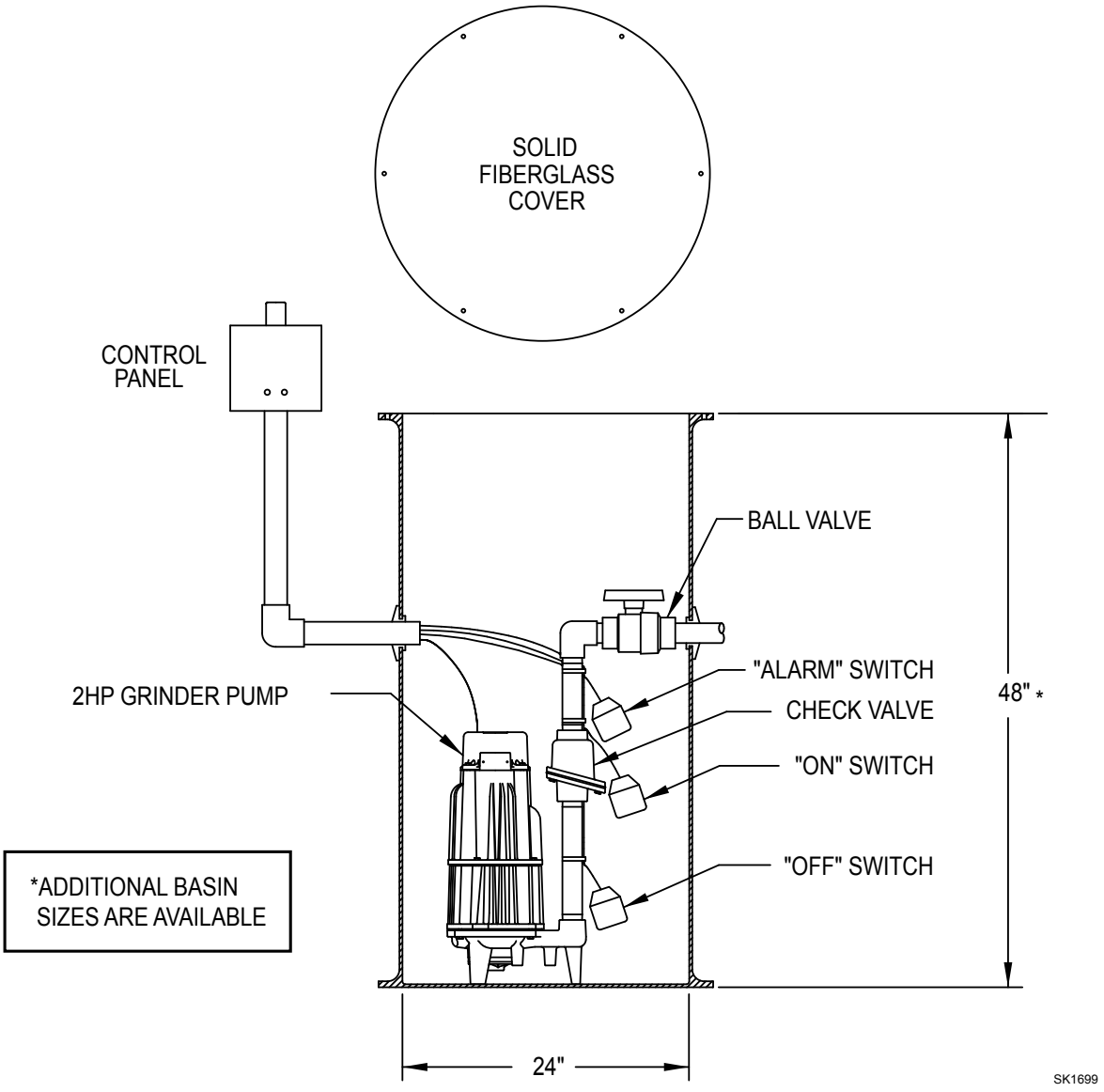

Complete System As Shown Above (P/N 920-0006) Includes:

Qty.	Part No.	Description
1	840-0004	230 Volt, 1 Ph, 2 HP Grinder Pump
1	10-0393	NEMA 4X Simplex Control Panel with Automatic Reversing
3	10-0743	Float Switch with 15' Cord
1	30-0163	1.25" Cast Iron Check Valve
1	30-0175	1.25" Ball Valve
1	31-0866*	24" X 48" Fiberglass Basin with Solid Fiberglass Cover

Loose fittings provided are to be field installed. There is one each of a 1¼", 1½", 2-2", and 4" pipe seal.
Discharge pipe and fittings are not included.

Approximate Weight: 260 lbs.

© Copyright 2014 Zoeller Co. All rights reserved.