Notice to installing contractor: Instructions must remain with installation.

Your Peace of Mind is Our Top Priority®

Product information presented here reflects conditions at time of publication. Consult factory regarding discrepancies or inconsistencies.

ZOELLER®

PUMP COMPANY

Zoeller Family of Water Solutions™

MAIL TO: *P.O. BOX 16347 • Louisville, KY 40256-0347 USA*
SHIP TO: *3649 Cane Run Road • Louisville, KY 40211-1961 USA*
+1 (502) 778-2731 • FAX +1 (502) 774-3624

50 Hz

visit our web site: www.zoeller.com

Section: W2.30.100
FM2549_Eb
0314
Supersedes
0213

NOTICE: VENT HOLE FOR CHECK VALVE SEE #4 IN CAUTION SECTION BELOW AND #4 ON PAGE 3

INSTALLATION INSTRUCTIONS

RECOMMENDED MODELS

EFFLUENT*/SUMP/DEWATERING	SEWAGE
49, 53, 55, 57, 59, 72, 76 Series	222 Series
86, 88, 98 Series	264, 266, 267, 268 Series
137, 139 Series	270, 4270, 271, 4271 Series
140, 4140, 145, 4145 Series	282 Series
152,153,161,162,163,165 Series	292, 293, 294 Series
185, 189 Series	4290, 4291 Series
371, 372, 373 Series	

DATE INSTALLED:
MODEL NUMBER:

P/N 150010

***Where codes permit, sewage pumps can be used for effluent systems. Non-automatic pump(s) with external level controls are recommended for septic tank applications.**

PREINSTALLATION CHECKLIST - ALL INSTALLATIONS

1. **Inspect your pump.** Occasionally, products are damaged during shipment. If the unit is damaged, contact your dealer before using. **DO NOT** remove the test plugs in the cover nor the motor housing.
2. **Carefully read the literature** provided to familiarize yourself with specific details regarding installation and use. These materials should be retained for future reference.

⚠ WARNING

SEE BELOW FOR LIST OF WARNINGS

1. To reduce the risk of electrical shock, a properly grounded receptacle or control box must be installed in accordance with the governing codes. Never remove ground pin from plug.
2. Make certain that the receptacle or control box is within reach of the pump's power supply cord. DO NOT USE AN EXTENSION CORD. Extension cords that are too long or too light do not deliver sufficient voltage to the pump motor, and they could present a safety hazard if the insulation were to become damaged or the connection end were to fall into a damp or wet area.
3. Make sure the pump's electrical supply circuit is equipped with fuses or circuit breakers of proper capacity. A separate branch circuit is recommended, sized according to the governing electrical codes for the current shown on the pump name plate.
4. **Testing for ground.** As a safety measure, each electrical outlet should be checked for ground using a circuit analyzer which will indicate if the power, neutral and ground wires are correctly connected to your outlet. If they are not, call a qualified, licensed electrician.
5. FOR YOUR PROTECTION, ALWAYS DISCONNECT PUMP FROM ITS POWER SOURCE BEFORE HANDLING. If pump is wired direct, de-energize the circuit at the control box. Wear insulated protective shoes and do not stand in water. Pumps equipped with a grounded plug are designed to help protect against electrical shock. DO NOT, UNDER ANY CIRCUMSTANCES, REMOVE THE GROUND PIN.
6. Installation and servicing of the pump's electrical circuits and hardware should only be performed by a qualified, licensed electrician.
7. Installation and maintenance of this appliance is not intended for persons (including children) with reduced physical, sensory or mental capabilities, or lack of experience or knowledge, unless they have been given supervision or instruction concerning use of the appliance by a person responsible for their safety.
8. **Risk of electrical shock.** Do not remove power supply cord and strain relief or connect conduit directly to the pump. If the supply cable is damaged, it must be replaced by an authorized Zoeller Representative.
9. Pump contains oil which becomes pressurized and hot when operating. Allow 2½ hours after disconnecting before attempting service.
10. Pump is not intended for potable water due to possible contamination by oil contained in the pump.
11. **Risk of electric shock.** These pumps have not been investigated for use in swimming pools and marine areas.

⚠ CAUTION

SEE BELOW FOR LIST OF CAUTIONS

1. This unit is not designed to handle any material larger than the pump's solids-passing ability.
   - 49 model and the 70 and 80 series pumps are designed to pass 9 mm ($^3/_8$") spherical solids.
   - 50 and 90 series,140, 371, 372 model pumps are designed to pass 12 mm (½") spherical solids.
   - 130 series pumps are designed to pass 15 mm ($^5/_8$") spherical solids.
   - 145 and 373 models and the 150, 160 and 180 series pumps are designed to pass 19 mm (¾") spherical solids.
   - 4290 series pumps are designed to pass 37 mm (1 ½") spherical solids.
   - 200 series sewage pumps are designed to pass 50 mm (2") spherical solids.
2. Check to be sure your power source is capable of handling the voltage requirements of the motor, as indicated on the pump name plate.
3. The installation of variable level float switches is the responsibility of the installing party, and care should be taken that the tethered float switch will not hang up on the pump apparatus or pit peculiarities and is secured so that the pump will shut off. It is recommended to use rigid piping and fittings and the pit be 45 cm (18") or larger in diameter.
4. **Vent hole.** It is necessary that all submersible sump, effluent, and sewage pumps capable of handling various sizes of solid waste be of the bottom intake design to reduce clogging and seal failures. If a check valve is incorporated in the installation, a 5 mm (3/16") vent hole must be drilled in the discharge pipe below the check valve and pit cover to purge the unit of trapped air. Vent hole should be checked periodically for clogging. The vent hole on a High Head application may cause too much turbulence. If you choose not to drill a vent hole, be sure the pump case and impeller is covered with liquid before connecting the pipe to the check valve. NOTE: THE HOLE MUST BE BELOW THE BASIN COVER AND CLEANED PERIODICALLY. Water stream will be visible when pump is operating.
5. Pump should be checked frequently for debris and/or build up which may interfere with the float "on" or "off" position. Repair and service should be performed by an Authorized Zoeller Service Station only.
6. Maximum operating temperature for standard model pumps must not exceed 54°C (130°F) for cast iron pumps, or 40° C (104° F) for pumps with plastic motor housings.
7. Do not operate a pump in an application where the Total Dynamic Head is less than the minimum Total Dynamic Head listed on the Pump Performance Curves.
8. For health reasons, do not unplug, turn off, or disable pump and use pump tank system as a way to fill up a sink or laundry tray, etc.

NOTE: Pumps with the UL mark and the US mark are tested to UL standard UL778. CSA-certified pumps are certified to CSA standard C22.2 No. 108.

REFER TO WARRANTY ON PAGE 2.

© Copyright 2014 Zoeller Co. All rights reserved.

LIMITED WARRANTY

Manufacturer warrants, to the purchaser and subsequent owner during the warranty period, every new product to be free from defects in material and workmanship under normal use and service, when properly used and maintained, for a period of one year from date of purchase by the end user, or 18 months from date of original manufacture of the product, whichever comes first. Parts that fail within the warranty period, one year from date of purchase by the end user, or 18 months from the date of original manufacture of the product, whichever comes first, that inspections determine to be defective in material or workmanship, will be repaired, replaced or remanufactured at Manufacturer's option, provided however, that by so doing we will not be obligated to replace an entire assembly, the entire mechanism or the complete unit. No allowance will be made for shipping charges, damages, labor or other charges that may occur due to product failure, repair or replacement.

This warranty does not apply to and there shall be no warranty for any material or product that has been disassembled without prior approval of Manufacturer, subjected to misuse, misapplication, neglect, alteration, accident or uncontrollable act of nature; that has not been installed, operated or maintained in accordance with Manufacturer's installation instructions; that has been exposed to outside substances including but not limited to the following: sand, gravel, cement, mud, tar, hydrocarbons, hydrocarbon derivatives (oil, gasoline, solvents, etc.), or other abrasive or corrosive substances, wash towels, feminine sanitary products, or any other abusive entity, etc. in all pumping applications. The warranty set out in the paragraph above is in lieu of all other warranties expressed or implied; and we do not authorize any representative or other person to assume for us any other liability in connection with our products.

Contact Manufacturer at, 3649 Cane Run Road, Louisville, Kentucky 40211 USA, Attention: Customer Support Department to obtain any needed repair or replacement of part(s) or additional information pertaining to our warranty.

MANUFACTURER EXPRESSLY DISCLAIMS LIABILITY FOR SPECIAL, CONSEQUENTIAL OR INCIDENTAL DAMAGES OR BREACH OF EXPRESSED OR IMPLIED WARRANTY; AND ANY IMPLIED WARRANTY OF FITNESS FOR A PARTICULAR PURPOSE AND OF MERCHANTABILITY SHALL BE LIMITED TO THE DURATION OF THE EXPRESSED WARRANTY.

Some jurisdictions do not allow limitations on the duration of an implied warranty, so the above limitation may not apply to you. Some jurisdictions do not allow the exclusion or limitation of incidental or consequential damages, so the above limitation or exclusion may not apply to you.

This warranty gives you specific legal rights and you may also have other rights which vary from jurisdiction to jurisdiction.

EASY DO'S & DON'T'S FOR INSTALLING UNIT

1. **DO** read all installation material with the unit.
2. **DO** inspect unit for any visible damage caused by shipping. Contact dealer if unit appears to be damaged.
3. **DO** remove all debris from the basin. Be sure that the pump will have a hard, level surface beneath it. **DO NOT** install on sand, gravel or dirt.
4. **DO** be sure that the area is large enough to allow proper clearance for the level control switch(es) to operate properly.
5. **DO Always Disconnect Pump From Power Source Before Handling**.
   DO always connect to a separately protected and properly grounded circuit.
   DO NOT ever cut, splice, or damage power cord (Only splice in a watertight junction box).
   DO NOT carry or lift pump by its power cord.
   DO NOT use an extension cord.
6. **DO** install a check valve and a union in the discharge line.
   DO NOT use a discharge pipe smaller than the pump discharge.
7. **DO NOT** utilize this unit for pumping gasoline or other hazardous liquids.
8. **DO** test pump immediately after installation to be sure the system is working properly.
9. **DO** review all applicable governing codes and verify that the installation conforms to each of them.
10. **DO** consult manufacturer for clarifications or questions.
11. **DO** consider a two-pump system with an alarm where an installation may become overloaded or primary pump failure would result in property damages.
12. **DO** consider a D.C. Backup System where a sump or dewatering pump is necessary for the prevention of property damages from flooding due to A.C. power disruptions, mechanical or electrical problems or system overloading.
13. **DO** inspect and test system for proper operations at least every 3 months.

SERVICE CHECKLIST

CONDITION	COMMON CAUSES
A. Pump will not start or run.	Check fuse, low voltage, overload open, open or incorrect wiring, open switch, impeller or seal bound mechanically, motor or wiring shorted. Float assembly held down. Switch, damaged or out of adjustment.
B. Motor overheats and trips overload or blows fuse.	Incorrect voltage, negative head (discharge open lower than normal) impeller or seal bound mechanically, motor shorted.
C. Pump starts and stops too often.	Float switch tether length too short, check valve stuck open, or none installed in long distance line, overload open, bidding, sump pit too small.
D. Pump will not shut off.	Debris under float assembly, float bound by basin sides or other, switch, damaged or out of adjustment.
E. Pump operates but delivers little or no water.	Check inlet, strainer housing, discharge pipe, and vent holes for obstructions. Discharge head exceeds pump capacity. Low or incorrect voltage. Incoming water containing air or causing air to enter pumping chamber. Incorrect motor rotation. (3 phase pumps only)
F. Drop in head and/or capacity after a period of use.	Increased pipe friction, clogged line or check valve. Abrasive material and adverse chemicals could possibly deteriorate impeller and pump housing. Check line. Remove base and inspect.
G. If tank or fittings leak.	Carefully tighten pipe joints (use pipe dope) and screws. Check gasket location, tighten lid evenly. Do not over tighten fittings or screws.

If the above checklist does not reveal the problem, consult the factory. Do not attempt to service or otherwise disassemble pump. Service must be performed by an authorized Zoeller Company representative.

© Copyright 2014 Zoeller Co. All rights reserved.

RECOMMENDED INSTALLATION FOR ALL APPLICATIONS

1. Electrical wiring and protection must be in accordance with governing electrical codes.
2. Install proper Zoeller unicheck (combination union and check valve), preferably just above the basin to allow easy removal of the pump for cleaning or repair. If high head or below cover installation is required, use 30-0164 on DN40 (1½") pipe, 30-0152 on DN50 (2") pipe and 30-0160 on DN30 (3") pipe.
3. All installations require a basin cover to prevent debris from falling into the basin and to prevent injury.
4. When a Unicheck is installed, drill a 5 mm ($^3/_{16}$") diameter hole in the discharge pipe even with the top of the pump. ***NOTE: THE HOLE MUST ALSO BE BELOW THE BASIN COVER AND CLEANED PERIODICALLY.*** (High Head unit see #4 under "Caution" on front page). Water stream will be visible from this hole when pump is operating.
5. Securely tape or clamp power cord to discharge pipe, clear of the float mechanism(s).
6. Use full-size discharge pipe.
7. Basin must be in accordance with governing codes and specifications.
8. Pump must be level and float mechanism(s) clear of sides of basin before starting pump.
9. Basin must be clean and free of debris after installation.
10. Gate valve, shut-off valve or ball valve to be supplied by installer and installed according to any and all codes.
11. Locate float switches as shown in sketches. The best place for the "off" point is above the motor housing and positioned 180° from the inlet. Never put "off" point below discharge on pump
12. Gas tight seals required to contain gases and odors.
13. Vent gases and odors to the atmosphere through vent pipe.
14. Optional pump stand (P/N 10-2421) eliminates the need for blocks or bricks under the pump. For use with effluent and dewatering pumps only.
15. Optional watertight control box available, see FM1597 for details.
16. For proper spacing of "On" - "Off" switches refer to local or national standards and guildlines.
17. Optional septic tank risers for easy access to pump, controls and filters.

NOTE: *Double-seal pumps offer extra protection from damage caused by seal failure.*

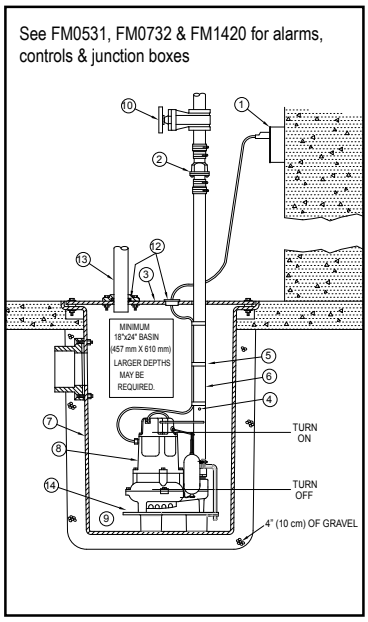

SK292

TYPICAL DEWATERING INSTALLATION

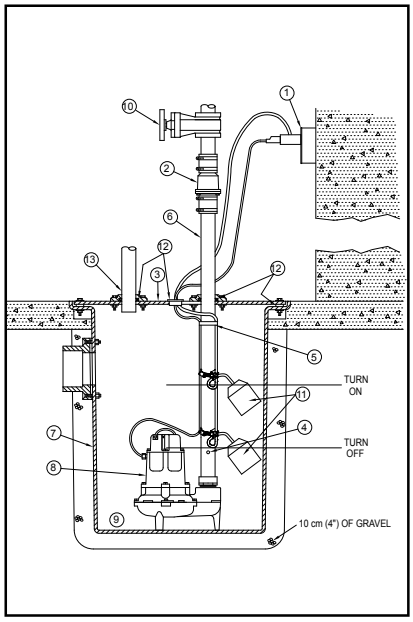

SK290

TYPICAL SEWAGE INSTALLATION

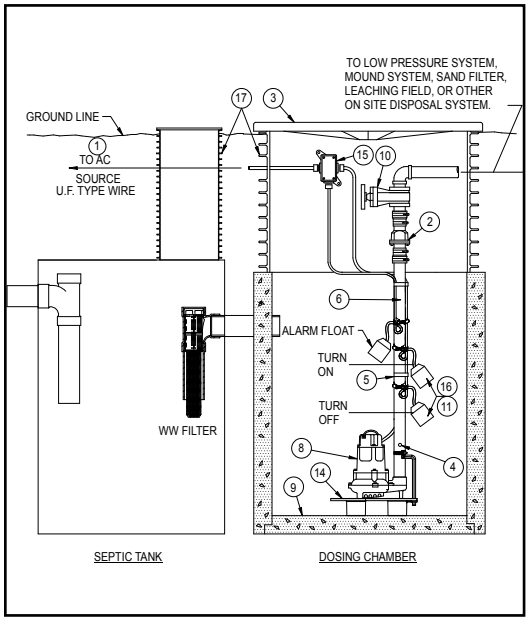

SK291

TYPICAL EFFLUENT INSTALLATION

All installations must comply with all applicable electrical and plumbing codes.

SUGGESTED METHODS OF FLOAT INSTALLATION

On some installations it may be desirable to install an independent hanger for the level control switches to avoid possible hang ups on the pumps, piping, valves, etc. Float hangers are available from Zoeller Company on Catalog Sheet FM0526 or can be fabricated from standard pipe and fittings.

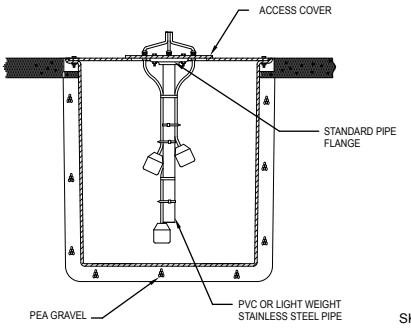

SK1217

TYPICAL FLOAT HANGER ON STEEL COVER PITS

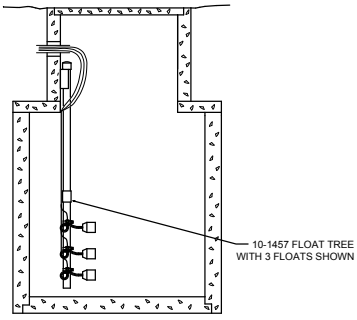

SK1218

TYPICAL FLOAT HANGER ON CONCRETE PITS OR SEPTIC TANK RISERS

© Copyright 2014 Zoeller Co. All rights reserved.

PUMP WIRING INSTRUCTIONS

⚠ WARNING **FOR YOUR PROTECTION, ALWAYS DISCONNECT PUMP FROM ITS POWER SOURCE BEFORE HANDLING**. For single phase pumps supplied with a grounded plug, **DO NOT, UNDER ANY CIRCUMSTANCES, REMOVE THE GROUND PIN.** The plug **must** be inserted into a mating grounded receptacle. **If** the installation does not have such a receptacle, it must be changed to the proper type, wired and grounded in accordance with all applicable local codes and ordinances.

All three phase pumps require motor starting devices with motor overload protection. Three phase pumps **must** be installed in accordance with all applicable local codes and ordinances. Pumps are not to be installed in locations classified as hazardous.

⚠ WARNING **Risk of electrical shock.** Do not remove power supply cord and strain relief or connect conduit directly to the pump.

⚠ WARNING Installation and checking of electrical circuits and hardware should be performed by a qualified licensed electrician.

Single Phase Installation

To operate a non-automatic pump automatically, a control panel or 20 amp control switch (P/N 10-0748) must be added to the power circuit. Follow the instructions provided with the panel or float switch to wire the system.

Three Phase Installation

Three phase pumps are nonautomatic. To operate automatically, a control panel is required. Follow the instructions provided with the panel to wire the system.

Before installing a pump, check the pump rotation to insure that wiring has been connected properly to power source, and that the green lead of power cord, is connected to a valid ground, momentarily energize the pump, observing the directions of kick back due to starting torque. Rotation is correct if kick back is in the opposite direction of rotation arrow on the pump casing. If rotation is not correct, switching of any two power leads other than ground, should provide the proper rotation.

EXTRA PROTECTION SYSTEMS

TWO-PUMP SYSTEM

The extra protection two-pump system is an economical solution to the costly duplex alternating pump system and it's easy to install.

The extra protection two-pump systems consists of:

a. two nonautomatic pumps with float switch of your choice

b. one alarm system

c. two unicheck valves as required

ADVANTAGES

1) The two pump system offers high pump performance without the high price. It is economical and easy to install.

2) Delivers more dependability than a single pump system and greatly reduces the risk of costly and time-consuming problems.

3) Affords greater satisfaction and peace of mind to all concerned by providing state of the art protection for costly and expensive surroundings.

4) Ability to change lead and lag positions by changing pump plug connection.

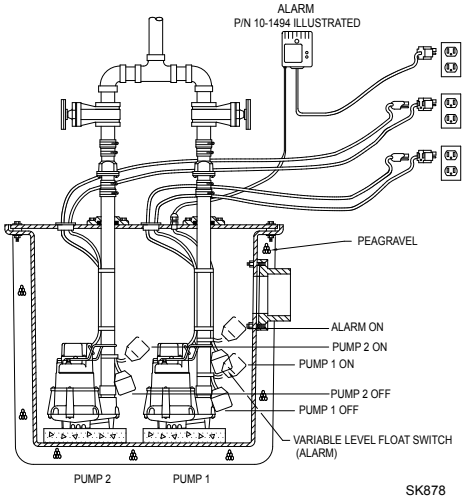

*MINIMUM DISTANCE 50 mm (2") BETWEEN PUMPS

NOTE: for CE-rated pumps only.

DECLARATION OF CONFORMITY

We, Zoeller, declare under our sole responsibility that the models 49/53/55/57/59/72/76/86/88/98/137/139/140/4140/145/4145/152/153/161/162/163/165/185/189/222/264/266/267/268/270/4270/271/4271/282/4290/4291/292/293/294/371/372/373 to which this declaration relates, are in conformity with the Council Directives on the approximation of the laws of the EC Member States relating to:

-- Machinery Directive (2006/42/EC)
Standards used: EN 809: 1998

-- Electrical equipment designed for use within certain voltage limits (2006/95/EC)
Standards used: EN60335-1:2002 and EN60335-2-41:2003

-- Electromagnetic Compatibility (2004/108/EC)
Standards used: EN 61000-3-2, EN 61000-3-3 and EN 55014-1

ZOELLER®
PUMP COMPANY

MAIL TO: *P.O. BOX 16347 • Louisville, KY 40256-0347 USA*
SHIP TO: *3649 Cane Run Road • Louisville, KY 40211-1961 USA*
+1 (502) 778-2731 • FAX +1 (502) 774-3624

Your Peace of Mind is Our Top Priority®

visit our web site:
www.zoeller.com

© Copyright 2014 Zoeller Co. All rights reserved.