Your Peace of Mind is Our Top Priority®

Product information presented here reflects conditions at time of publication. Consult factory regarding discrepancies or inconsistencies.

ZOELLER®

PUMP COMPANY

Zoeller Family of Water Solutions™

50/60Hz

FM0433_Ec
0214
Supersedes
1111

MAIL TO: *P.O. BOX 16347 • Louisville, KY 40256-0347*
SHIP TO: *3649 Cane Run Road • Louisville, KY 40211-1961*
(502) 778-2731 • 1 (800) 928-PUMP • FAX (502) 774-3624

visit our web site:
www.zoeller.com

REPLACEMENT PARTS LIST FOR MODELS:

U137 AUTOMATIC 220V / 50 Hz
V137 NONAUTOMATIC 220V / 50 Hz
BK137 AUTOMATIC 220V / 60 Hz
BL137 NONAUTOMATIC 220V / 60 Hz

Consult factory for all other models

TO ORDER REPLACEMENT PARTS:

PLEASE FURNISH THE FOLLOWING INFORMATION:

- Model Number.
- Part Number of Pump.
- Part Number and Description of part.

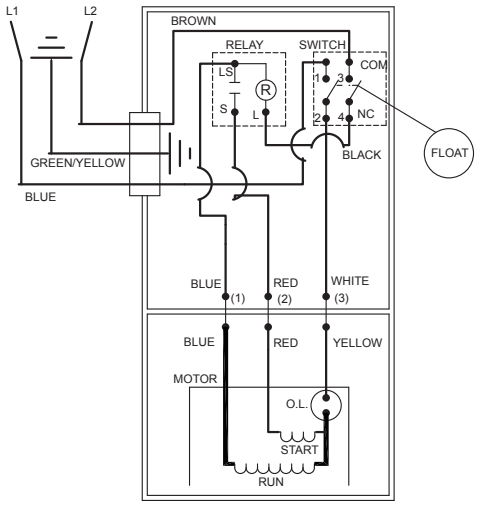

004620

WIRING DIAGRAM FOR MODELS
"U137-A" , "U137-B" & "BK137-A"
8/90 (VS) thru Present

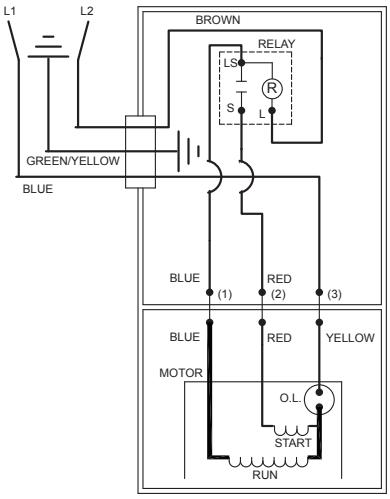

002395

WIRING DIAGRAM FOR MODELS
"V137-A", "V137-B" and "BL137-A"
5/09 (OJ) thru Present

© Copyright 2014 Zoeller Co. All rights reserved.

REPLACEMENT PARTS LIST FOR MODELS “U137”

See page 6 for illustration.

			MODELS:		U137-A & B
REF. NO.		DESCRIPTION	QTY	NOTES	8/90 thru Current
1	•	Handle	1		267032
2		Case-Mach.	1		004610
3	•	Gasket,Case/Cover	1		267007
4		Relay Asm	1		147135
5		Wire Pkg	1		267014
6	•	Seal,Thru Wall Term	3		003402
7	•	Plug,Test	1		034090
8	•	Clamp,Strain Relief	1		004200
9		Cord Term & Seal (8’ length)	1	5	151322
		Cord Term & Seal (33’ length)			151323
		Cord Term & Seal (No plug)			094072
10	•	Seal,Cord-Asm	1		151324
		Seal,Cord-Asm (No plug)			094032
11		Bearing,Upper Rotor	1		N/A
12	•	Guard	1		267008
13		Float-Polypropylene	1		034019
14	•	Arm & Seal Asm	1		004741
15		Case & Switch	1		004739
16		Switch Asm	1		004740
17		Rod-Float	1		001526
18		Housing,Mtr&Str GE	1	1	151334
19		Rotor Asm-GE	1		267005
20	•	Seal,Mtr Hsg	1		267006
21	•	Washer,Thrust	1		002140
22		Bearing,Sleeve-Lower rotor	1		N/A
23		Housing,Pump-Mach	1		137004
24	•	Oil,Dielectric	1		267056
25		Guide Asm,Flt Rod	1		004676
26	•	Seal Asm,Shaft-Blister Pak	1		267027
27		Impeller	1		137006
28		Base & Plate Asm	1		001509
29		Strainer Plate	1		137008
30	•	Screw,#1/4-20 X.75 HHM	9		001916
31	•	Screw,#6-32x.438	2		004644
32	•	Screw,#10-24 X.375 RHM	3		001883
33	•	Screw,Sem-10-24x.5HH	1		002000
34	•	Screw,#6-32x.25RHM	1		001877
35	•	Screw,#1/4-20 X.875 HHM	4		012491
¤		Rebuild Kit	1		151335

• Items included in Rebuild Kit. ¤ Not shown in illustration

NOTES:

1) Mtr. Hsg., Brg., Stator & Term. (Item 18) are preassembled at the factory and must be replaced as a unit. Stator is permanently attached to the Motor Housing. Plug (Item 7); Seal, Thru Wall Term. (Item 6) and Bearing - Upper (Item 11) are replaceable.
2) If an “X” follows Model No. or Date Mfg. consult factory for ordering any parts.
3) See FM0160 Parts Price List for listing of parts prices.
4) NA indicates not applicable.
5) Cut plug off if required.

© Copyright 2014 Zoeller Co. All rights reserved.

REPLACEMENT PARTS LIST FOR MODELS “V137”

See page 7 for illustration.

				MODELS:	V137-A
REF. NO.		DESCRIPTION	QTY	NOTES	5/09 thru Current
1	•	Handle	1		267032
2		Cover and Handle	1		267051
3	•	Cover-Mach.	1		267052
4		Gasket,Case/Cover	1		267007
5		Relay Asm	1		002474
6	•	Wire Pkg	3		267014
7	•	Seal,Thru Wall Term	1		003402
8	•	Plug,Test	1		034090
9		Clamp,Strain Relief	1		004200
10		Cord Term & Seal (33' length)	1	5	151460
		Cord Term & Seal (No plug)			003618
11	•	Seal,Cord-Asm	1		151324
		Seal,Cord-Asm (No plug)			094032
12		Bearing,Upper Rotor	1		N/A
13	•	Retainer,Handle/Non-Auto	1		267053
14		Housing,Mtr&Str GE	1		151334
15	•	Oil,Dielectric	1		267056
16		Rotor Asm-GE	1		267005
17		Seal,Mtr Hsg	1		267006
18		Washer,Thrust	1		002140
19		Bearing,Sleeve-Lower rotor	1	1	N/A
20		Housing,Pump-Mach	1		137004
21	•	Seal Asm,Shaft-Blister Pak	1		267027
22	•	Impeller	1		137006
23		Base & Plate Asm	1		001509
24		Strainer Plate	1		137008
25	•	Screw,#6-32x.25RHM	1		001877
26		Screw,#1/4-20 X.75 HHM	1		001916
27	•	Screw,#10-24 X.375 RHM	1		001883
28		Screw,Sem-10-24x.5HH	1		002000
29		Screw,#1/4-20 X.875 HHM	1		012491
¤		Rebuild Kit	1		151335

• Items included in Rebuild Kit. ¤ Not shown in illustration

NOTES:

1) Mtr. Hsg., Brg., Stator & Term. (Item 14) are preassembled at the factory and must be replaced as a unit. Stator is permanently attached to the Motor Housing. Plug (Item 8); Seal, Thru Wall Term. (Item 7) and Bearing - Upper (Item 12) are replaceable.
2) If an “X” follows Model No. or Date Mfg. consult factory for ordering any parts.
3) See FM0160 Parts Price List for listing of parts prices.
4) NA indicates not applicable.
5) Cut plug off if required.

© Copyright 2014 Zoeller Co. All rights reserved.

REPLACEMENT PARTS LIST FOR MODELS “BK137”

See page 6 for illustration.

				MODELS:	BK137-A
REF. NO.		DESCRIPTION	QTY	NOTES	5/95 thru Current
1	•	Handle	1		267032
2		Case-Mach.	1		004610
3	•	Gasket,Case/Cover	1		267007
4		Relay Asm	1		147135
5		Wire Pkg	1		267014
6	•	Seal,Thru Wall Term	3		003402
7	•	Plug,Test	1		034090
8	•	Clamp,Strain Relief	1		001770
9		Cord Term & Seal	1		007694
10	•	Seal,Cord-Asm	1		010154
11		Bearing,Upper Rotor	1		N/A
12	•	Guard	1		267008
13		Float-Polypropylene	1		034019
14	•	Arm & Seal Asm	1		004741
15		Case & Switch	1		004739
16		Switch Asm	1		004740
17		Rod-Float	1		001526
18		Housing,Mtr&Str GE	1	1	151334
19		Rotor Asm-GE	1		267005
20	•	Seal,Mtr Hsg	1		267006
21	•	Washer,Thrust	1		002140
22		Bearing,Sleeve-Lower rotor	1		N/A
23		Housing,Pump-Mach	1		137004
24	•	Oil,Dielectric	1		267056
25		Guide Asm,Flt Rod	1		004676
26	•	Seal Asm,Shaft-Blister Pak	1		267027
27		Impeller	1		137006
28		Base & Plate Asm	1		001509
29		Strainer Plate	1		137008
30	•	Screw,#1/4-20 X.75 HHM	9		001916
31	•	Screw,#6-32x.438	2		004644
32	•	Screw,#10-24 X.375 RHM	3		001883
33	•	Screw,Sem-10-24x.5HH	1		002000
34	•	Screw,#6-32x.25RHM	1		001877
35	•	Screw,#1/4-20 X.875 HHM	4		012491
¤		Rebuild Kit	1		151547

• Items included in Rebuild Kit. ¤ Not shown in illustration

NOTES:

1) Mtr. Hsg., Brg., Stator & Term. (Item 18) are preassembled at the factory and must be replaced as a unit. Stator is permanently attached to the Motor Housing. Plug (Item 7); Seal, Thru Wall Term. (Item 6) and Bearing - Upper (Item 11) are replaceable.
2) If an “X” follows Model No. or Date Mfg. consult factory for ordering any parts.
3) See FM0160 Parts Price List for listing of parts prices.
4) NA indicates not applicable.
5) Cut plug off if required.

© Copyright 2014 Zoeller Co. All rights reserved.

REPLACEMENT PARTS LIST FOR MODELS “BL137”

See page 7 for illustration.

			MODELS:		BL137-A, B, C
REF. NO.		DESCRIPTION	QTY	NOTES	2/96 thru Current
1	•	Handle	1		267032
2		Cover and Handle	1		267051
3	•	Cover-Mach.	1		267052
4		Gasket,Case/Cover	1		267007
5		Relay Asm	1		002474
6	•	Wire Pkg	1		267014
7	•	Seal,Thru Wall Term	3		003402
8	•	Plug,Test	1		034090
9		Clamp,Strain Relief	1		001770
10	•	Cord Term & Seal	1		151546
11		Seal,Cord-Asm	1		010154
12	•	Bearing,Upper Rotor	1		N/A
13		Retainer,Handle/Non-Auto	1		267053
14	•	Housing,Mtr&Str GE	1		151334
15		Oil,Dielectric	1		267056
16		Rotor Asm-GE	1		267005
17		Seal,Mtr Hsg	1		267006
18		Washer,Thrust	1	1	002140
19		Bearing,Sleeve-Lower rotor	1		N/A
20	•	Housing,Pump-Mach	1		137004
21	•	Seal Asm,Shaft-Blister Pak	1		267027
22		Impeller	1		137006
23		Base & Plate Asm	1		001509
24	•	Strainer Plate	1		137008
25		Screw,#6-32x.25RHM	1		001877
26	•	Screw,#1/4-20 X.75 HHM	9		001916
27		Screw,#10-24 X.375 RHM	3		001883
28		Screw,Sem-10-24x.5HH	1		002000
29		Screw,#1/4-20 X.875 HHM	4		012491
¤	•	Rebuild Kit	1		151547

• Items included in Rebuild Kit. ¤ Not shown in illustration

NOTES:

1) Mtr. Hsg., Brg., Stator & Term. (Item 14) are preassembled at the factory and must be replaced as a unit. Stator is permanently attached to the Motor Housing. Plug (Item 8); Seal, Thru Wall Term. (Item 7) and Bearing - Upper (Item 12) are replaceable.
2) If an “X” follows Model No. or Date Mfg. consult factory for ordering any parts.
3) See FM0160 Parts Price List for listing of parts prices.
4) NA indicates not applicable.
5) Cut plug off if required.

© Copyright 2014 Zoeller Co. All rights reserved.

REPLACEMENT PARTS ILLUSTRATION FOR MODELS “U137” AND “BK137”

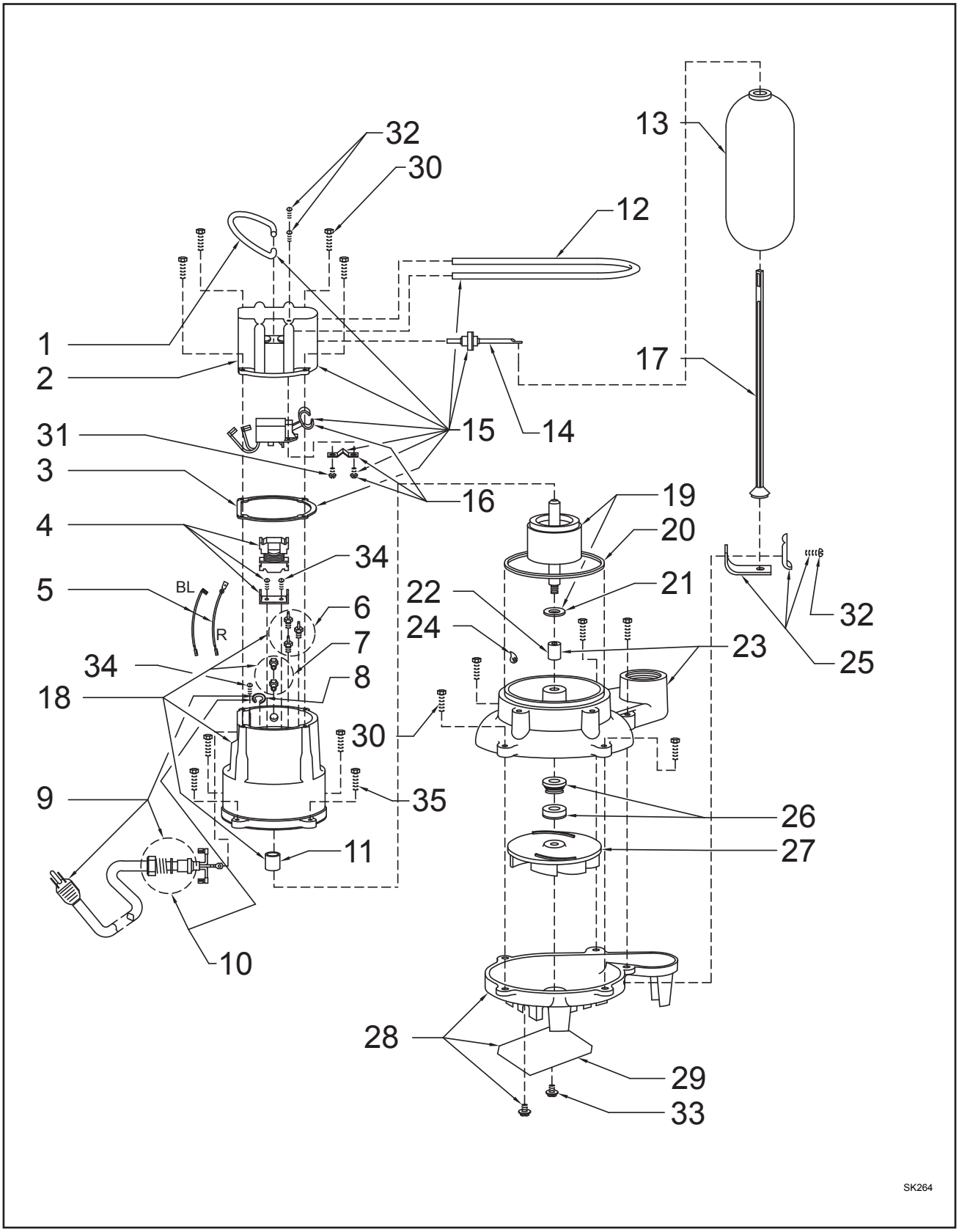

© Copyright 2014 Zoeller Co. All rights reserved.

REPLACEMENT PARTS ILLUSTRATION FOR MODELS “V137” AND “BL137”

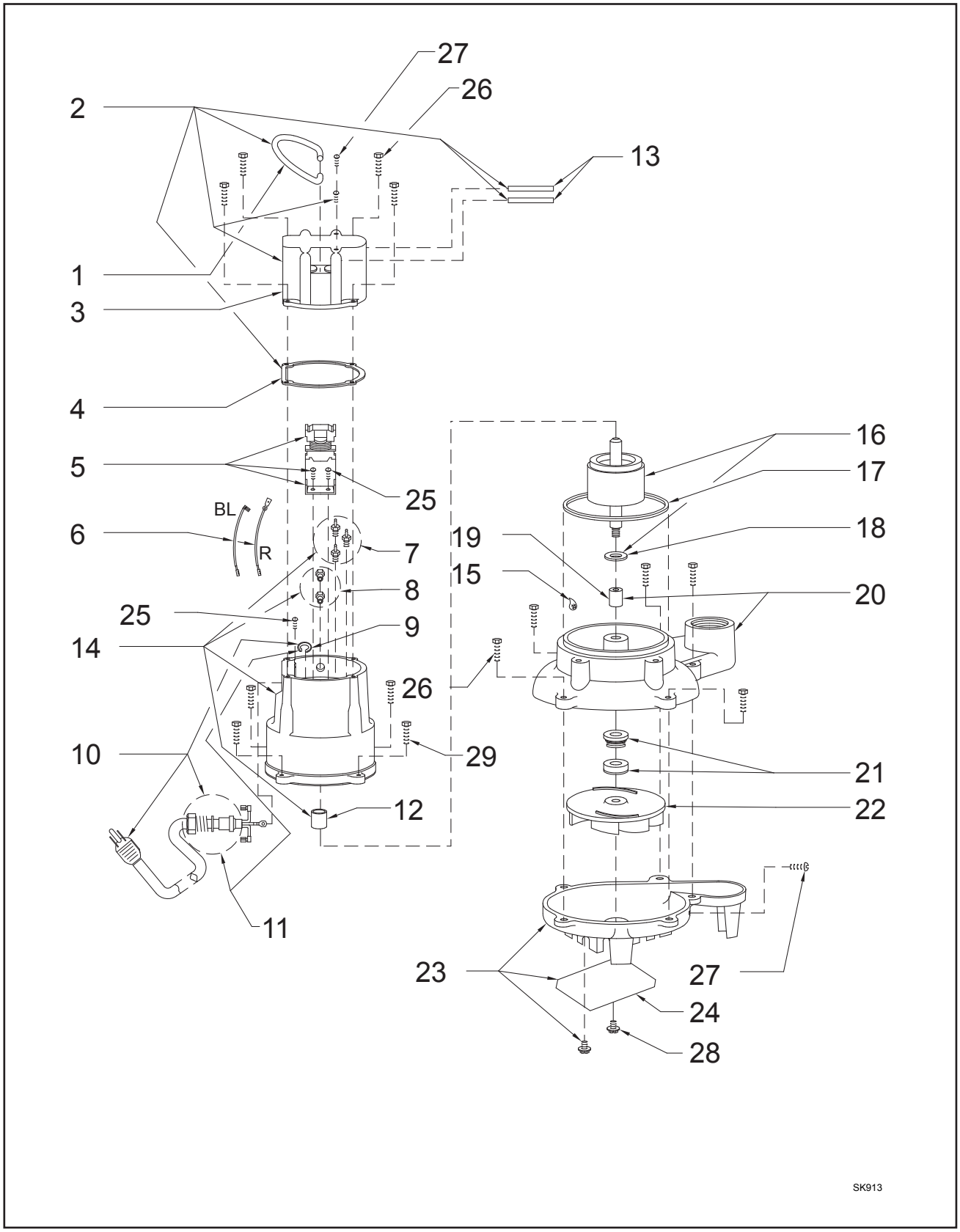

© Copyright 2014 Zoeller Co. All rights reserved.

ZOELLER®
PUMP COMPANY

MAIL TO: P.O. BOX 16347 • Louisville, KY 40256-0347
SHIP TO: 3649 Cane Run Road • Louisville, KY 40211-1961
(502) 778-2731 • 1 (800) 928-PUMP • FAX (502) 774-3624

Your Peace of Mind is Our Top Priority®

visit our web site:
www.zoeller.com

© Copyright 2014 Zoeller Co. All rights reserved.