Notice to Installer: Instructions must remain with installation.

Your Peace of Mind is Our Top Priority®

Product information presented here reflects conditions at time of publication. Consult factory regarding discrepancies or inconsistencies.

ZOELLER®

PUMP COMPANY

Zoeller Family of Water Solutions™

MAIL TO: *P.O. BOX 16347 • Louisville, KY 40256-0347*
SHIP TO: *3649 Cane Run Road • Louisville, KY 40211-1961*
(502) 778-2731 • 1 (800) 928-PUMP • FAX (502) 774-3624

FM2367
0715
Supersedes
0111

visit our web site:
www.zoeller.com

DESIGNED • MACHINED • ASSEMBLED IN THE USA

OIL SMART® PUMP SWITCH
INSTALLATION INSTRUCTIONS

⚠ WARNING

1. All installations must be in accordance with the National Electrical Code, and any other applicable state and local electrical requirements.
2. **Do not remove ground pin.** Severe electrical shock could occur.
3. Check with local codes for proper installation.

⚠ WARNING

1. The switch and pump are not rated for explosive environments. This product is intended for hydraulic oils only.

Installation Instructions for 1 1/2" pipe.

1. Review figures 1,2,3 and 4.
2. Attach Oil Smart® Pump Switch to Quick Mount Bracket using #10 screws and nuts provided (See Figure 1).
3. Snap bracket onto discharge pipe or float tree pipe (See Figure 1).
4. Locate pump switch sensor rod at shut-off height 2" above the pump (See Figure 3 or 4).
5. Place hose clamp on pipe under quick mount bracket (See Figure 1) for reference location of the pump switch.
6. For easy maintenance, just snap bracket off and back on using the hose clamp as a guide.
7. Mount pump switch clear of inlet water and at least 1" to 2" from any metallic material.

Installation Instructions other than 1 1/2" pipe.

1. Use the universal PVC bracket and clamp provided.
2. Insert hose clamp through top of bracket. (see figure 2)
3. Mount Oil Smart® Pump Switch to universal bracket using # 10 screws and nuts provided.
4. Attach Oil Smart® Pump Switch with "off" rod 2" above the top of the pump (See Figure 3 or 4).
7. Mount pump switch clear of inlet water and at least 1" to 2" from any metallic material.

Installation instructions for mounting to basin wall.

Reference FM2364 or FM2104.

Operation

Normal Condition (Water Only)
The short sensor probe turns the pump "on" and the long sensor probe turns the pump "off". When the short sensor is in contact with water, the pump will continue to cycle "on and "off" until the short sensor detects oil.

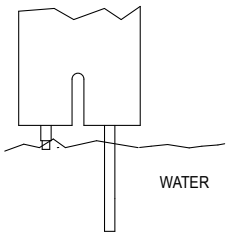

Oil Present Condition
The pump will not cycle if oil is in contact with the short sensor.

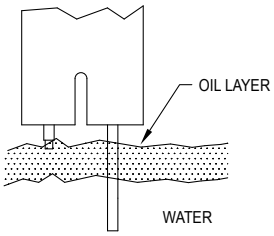

High Water (Oil Present Condition)
If additional water enters into the basin it will cause the oil layer to raise above the short sensor resulting in the pump cycling.

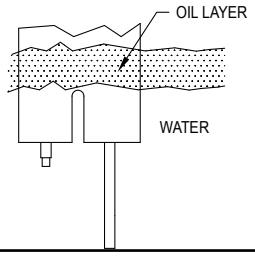

SK2568

Maintenance

1. Plastic switch case and 304 SS sensor leads must be kept clean, free of corrosion, mud, soap. Clean switch every four months or as often as environmental conditions dictate.
2. Clean with oil base product like kerosene, solvent or WD40. Do not use soap.

© Copyright 2015 Zoeller® Co. All rights reserved.

FIGURE 1 Mounting for 1-1/2" Pipe.

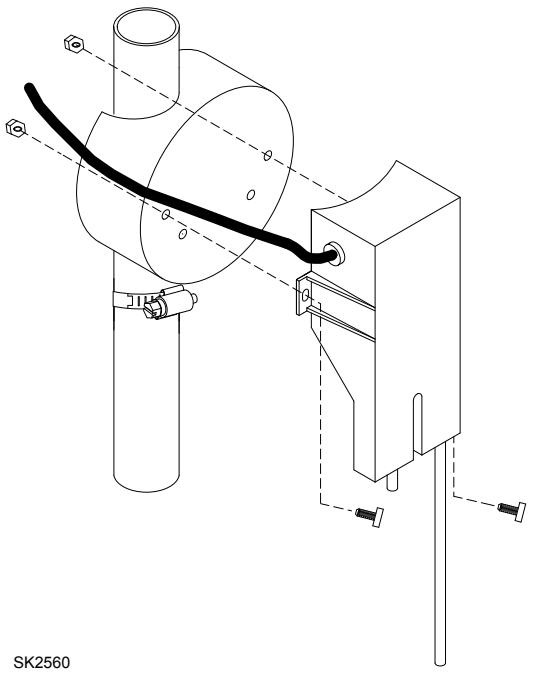

FIGURE 2 Mounting for Other Than 1-1/2" Pipe.

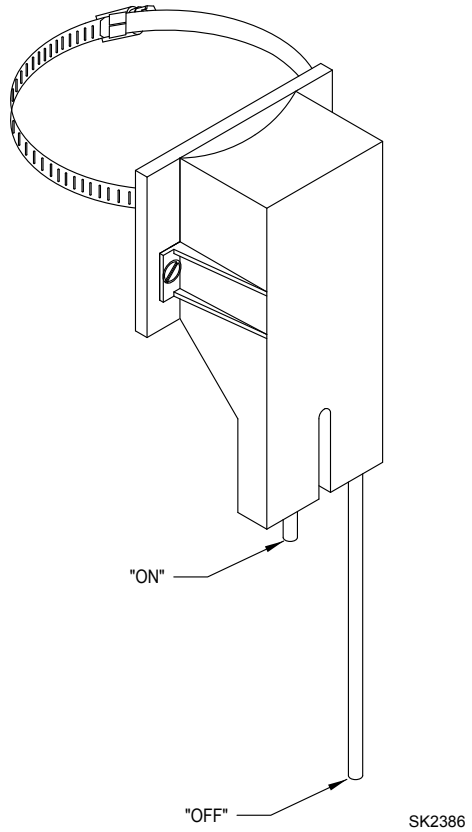

FIGURE 3 Typical Installation of Oil Smart® Pump Switch and Alarm Panel.

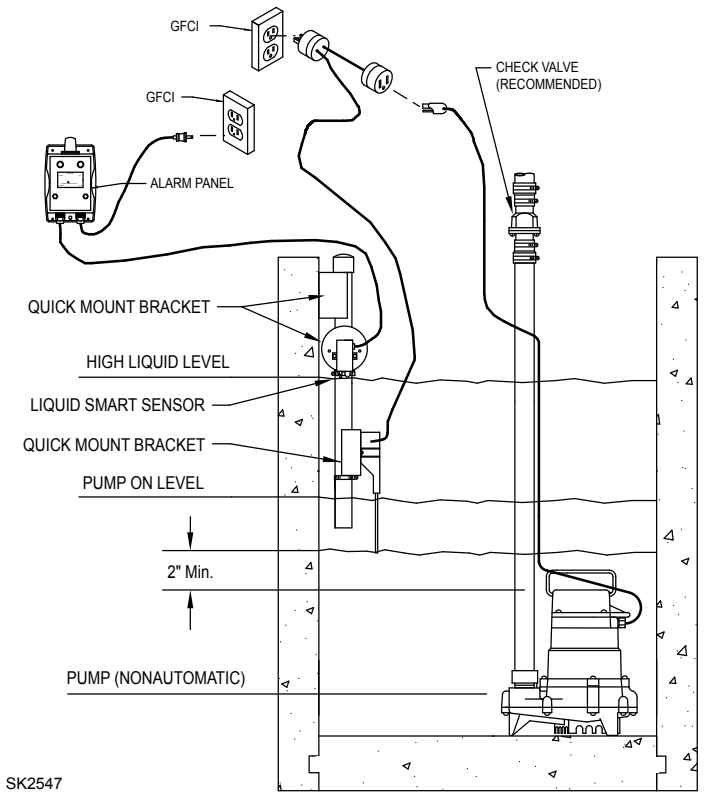

FIGURE 4 Typical Installation of Oil Smart® Pump Switch and Alarm Panel.

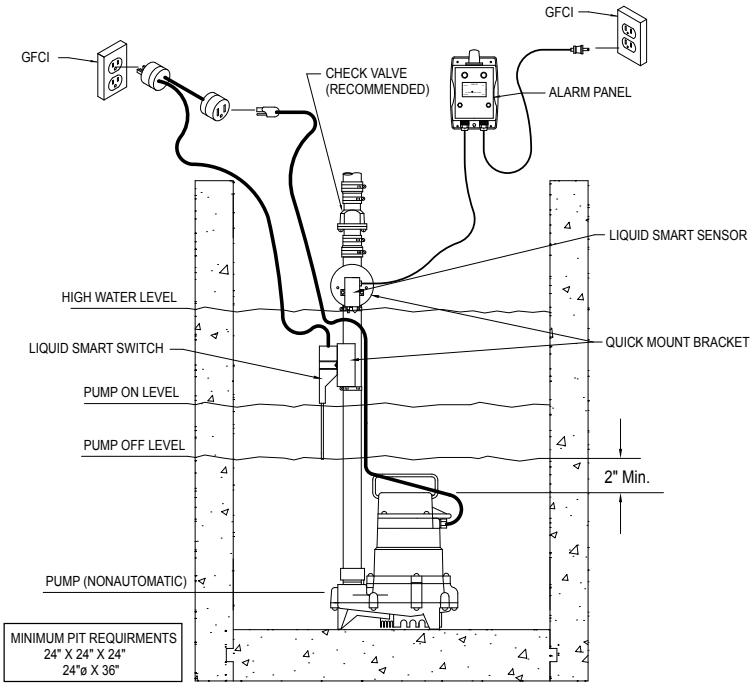

ZOELLER®
PUMP COMPANY

MAIL TO: P.O. BOX 16347 • Louisville, KY 40256-0347
SHIP TO: 3649 Cane Run Road • Louisville, KY 40211-1961
(502) 778-2731 • 1 (800) 928-PUMP • FAX (502) 774-3624

Your Peace of Mind is Our Top Priority®

visit our web site:
www.zoeller.com

© Copyright 2015 Zoeller® Co. All rights reserved.