Your Peace of Mind is Our Top Priority®

Zoeller Pump Company
Zoeller Engineered Products
Clarus Environmental
Flint & Walling
Star Water Systems

ZOELLER®
COMPANY
Zoeller Family of Water Solutions™

MAIL TO: *P.O. BOX 16347 • Louisville, KY 40256-0347 USA*
SHIP TO: *3649 Cane Run Road • Louisville, KY 40211-1961 USA*
+1 (502) 778-2731 • FAX +1 (502) 774-3624 • www.zoeller.com

FM0434_Eb
0212
Supersedes
New

50Hz

REPLACEMENT PARTS LIST FOR MODELS:

U139 AUTOMATIC 220V
V139 AUTOMATIC 220V

Consult factory for all other models

TO ORDER REPLACEMENT PARTS:

PLEASE FURNISH THE FOLLOWING INFORMATION:

- Model Number.
- Part Number and Description of part.

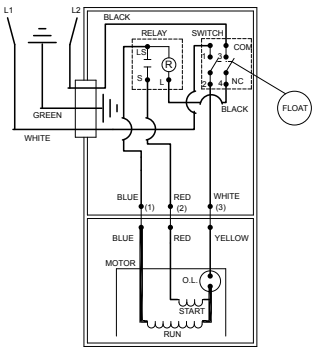

or

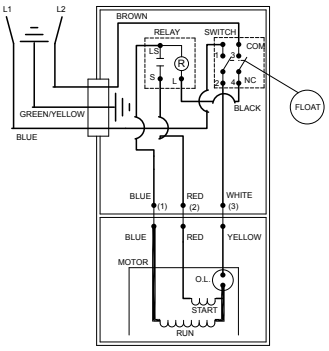

004620

WIRING DIAGRAM FOR MODELS
"U139-A", "U139-B", "U139-C"
7/03 (VS) thru Present

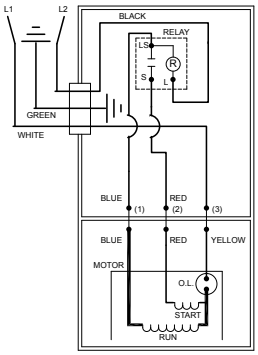

or

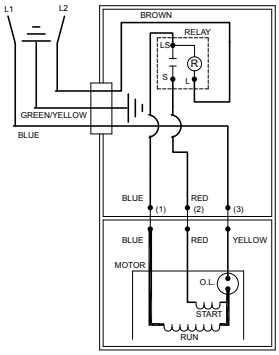

002395

WIRING DIAGRAM FOR MODEL
"V137-A"
5/09 thru Present

© Copyright 2012 Zoeller Co. All rights reserved.

REPLACEMENT PARTS LIST FOR MODELS “U139-A”, “U139-B”, “U139-C”

See back page for “U139” illustration.

			MODELS:	U139-A, U139-B, U139-C
REF. NO.	DESCRIPTION	QTY	NOTES	7/03 thru Current
1	• Handle	1		267032
2	Case-Mach	1		004611
3	• Gasket, Case/Cover	1		267007
4	Relay Asm	1		147135
5	Wire Pkg	1		267014
6	• Seal, Thru Wall Term	3		003402
7	• Plug, Test	1		034090
8	• Clamp, Strain Relief	1		004200
9	Cord Term & Seal	1	5	151323
	Cord Term & Seal			094072
10	• Seal, Cord-Asm	1		151324
11	Bearing, Upper Rotor	1		NA
12	• Guard	1		267008
13	Float	1		034019
14	• Arm & Seal Asm	1		004741
15	Case & Switch	1		004742
16	Switch Asm.	1		004740
17	Rod, Float	1		001526
18	Housing, Mtr-&Str	1	1	002478
19	Rotor Asm	1		267005
20	• Seal, Mtr Hsg	1		267006
21	• Washer, Thrust	1		002140
22	Bearing, Sleeve-Lower Rotor	1		NA
23	Housing, Pump-Mach	1		139018
24	• Oil, Dielectric	1		267056
25	Guide Asm Float Rod	1		004676
26	• Seal Asm, Shaft-Blister Pak	1		267027
27	Impeller	1		139006
28	Base & Plate	1		139002
29	Strainer Plate	1		137008
30	• Screw, #¼ - 20 x.75 HHM	9		001916
31	• Screw, #6 - 32 x .438	2		004644
32	• Screw, #10 - 24 x .375 RHM	3		001883
33	• Screw, Sem #10 - 24 x .5 HH	1		002000
34	• Screw, #6 - 32 x .25 RHM	1		001877
35	• Screw, #¼ - 20 x.875 HHM	4		012491
¤	Rebuild Kit	1		151335

• Items included in Rebuild Kit. ¤ Not shown in illustration.

NOTES:

1) Mtr. Hsg., Brg., Stator & Term. (Item 18) are preassembled at the factory and must be replaced as a unit. Stator is permanently attached to the Motor Housing. Plug (Item 7); Seal, Thru Wall Term. (Item 6) and Bearing - Upper (Item 11) are replaceable.
2) If an “X” follows Model No., or Date Mfg. on brass ID tag, consult factory for ordering any parts.
3) See FM0160 Parts Price Sheet for listing of parts prices.
4) “NA” indicates, not applicable.
5) Cut plug off, if required.

© Copyright 2012 Zoeller Co. All rights reserved.

REPLACEMENT PARTS LIST FOR MODELS “V139”

See back page for “V139” illustration.

			MODEL:	“VI39-A”
REF. NO.	DESCRIPTION	QTY	NOTES	05/09 thru Current
1	• Handle	1		267032
2	Cover & Handle Asm	1		267051
3	Cover-Mach	1		267052
4	• Gasket, Case/Cover	1		267007
5	Relay Asm	1		002474
6	Wire Pkg	1		267014
7	• Seal, Thru Wall Term	3		003402
8	• Plug, Test	1		034090
9	• Clamp, Strain Relief	1		004200
10	Cord Term & Seal	1		151460
11	• Seal, Cord-Asm	1		151324
12	Bearing, Upper Rotor	1		NA
13	• Retainer, Handle / Non-Auto	1		267053
14	Housing, Mtr & Str	1	1	151334
15	• Oil, Dielectric	1		267056
16	Rotor Asm, GE	1		267005
17	• Seal, Mtr Hsg	1		267006
18	• Washer, Thrust	1		002140
19	Bearing, Sleeve-Lower Rotor	1		NA
20	Housing, Pump-Mach	1		137004
21	• Seal Asm, Shaft - Blister Pack	1		267027
22	Impeller	1		137006
23	Base & Plate Asm	1		137020
24	Strainer Plate	1		137008
25	• Screw, #6 - 32 x .25 RHM	1		001877
26	• Screw, #¼ - 20 x .75 HHM	9		001916
27	• Screw, #10 - 24 x .375 RHM	3		001883
28	• Screw, #Sem 10 - 24 x .5 HH	1		002000
29	• Screw, #¼ - 20 x .875 HHM	4		012491
¤	Rebuild Kit	1		151335

• Items included in Rebuild Kit. ¤ Not shown in illustration.

NOTES:

1) Mtr. Hsg., Brg., Stator & Term. (Item 18) are preassembled at the factory and must be replaced as a unit. Stator is permanently attached to the Motor Housing. Plug (Item 7); Seal, Thru Wall Term. (Item 6) and Bearing - Upper (Item 11) are replaceable.
2) If an “X” follows Model No., or Date Mfg. on brass ID tag, consult factory for ordering any parts.
3) See FM0160 Parts Price Sheet for listing of parts prices.
4) “NA” indicates, not applicable.

Zoeller Pump Company
Zoeller Engineered Products
Clarus Environmental
Flint & Walling
Star Water Systems

MAIL TO: *P.O. BOX 16347 • Louisville, KY 40256-0347 USA*
SHIP TO: *3649 Cane Run Road • Louisville, KY 40211-1961 USA*
+1 (502) 778-2731 • FAX +1 (502) 774-3624 • www.zoeller.com

Your Peace of Mind is Our Top Priority®

ZOELLER® COMPANY
Zoeller Family of Water Solutions™

© Copyright 2012 Zoeller Co. All rights reserved.

REPLACEMENT PARTS ILLUSTRATION FOR MODELS “M139” AND “D139”

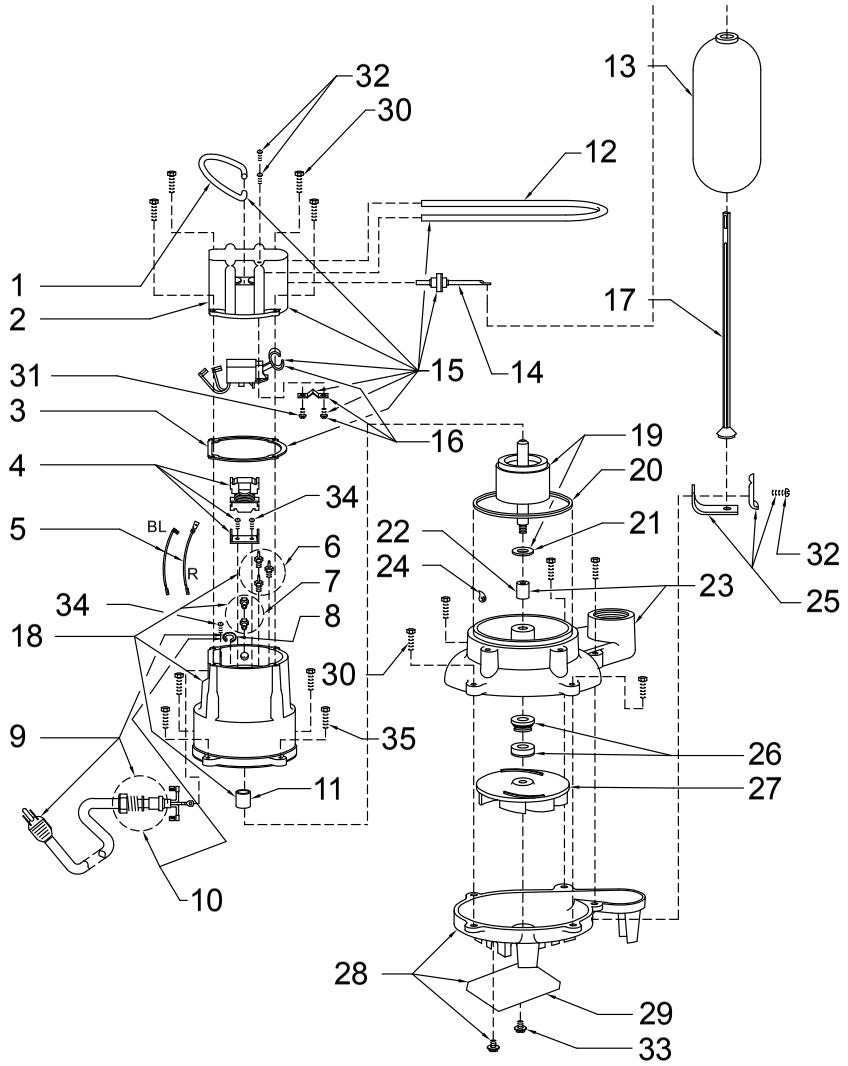

REPLACEMENT PARTS ILLUSTRATION FOR MODELS “N139” AND “E139”

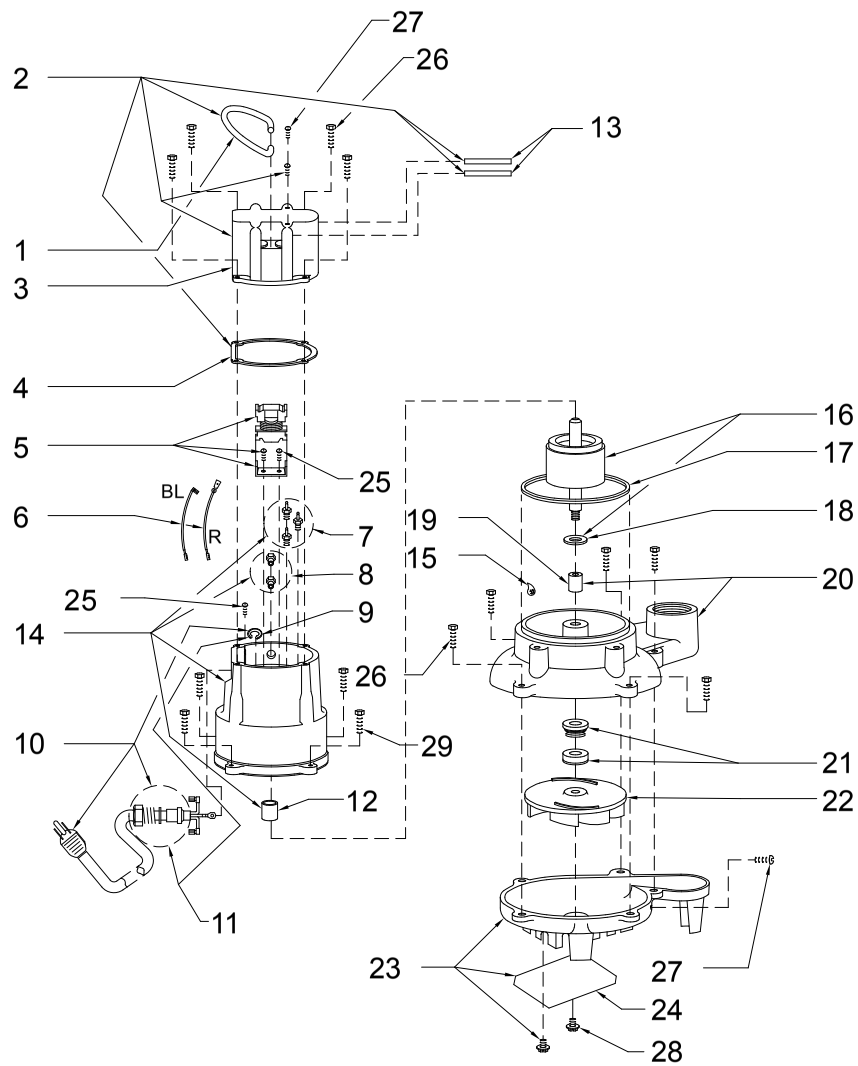

© Copyright 2012 Zoeller Co. All rights reserved.