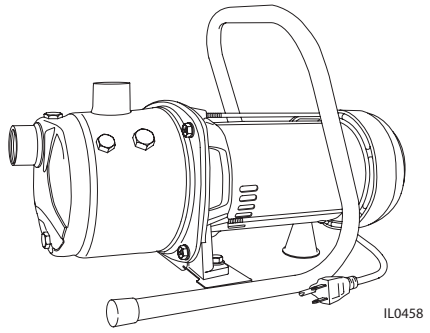

PORTABLE LAWN SPRINKLER AND UTILITY PUMP

Description

This pump is designed to sprinkle lawns and small gardens from lakes, ponds, or rivers, empty or fill stock tanks, remove standing water from flooded areas, transfer water or boost water pressure. Flammable liquids such as gasoline, chemicals or corrosive liquids should never be used with this pump.

Safety Guidelines

This manual contains information that is very important to know and understand. This information is provided for SAFETY and to PREVENT EQUIPMENT PROBLEMS. To help recognize this information, observe the following symbols.

DANGER ***Danger indicates an imminently hazardous situation which, if not avoided, will result in death or serious injury.***

WARNING ***Warning indicates a potentially hazardous situation which, if not avoided, could result in death or serious injury.***

CAUTION ***Caution indicates a potentially hazardous situation, which, if not avoided, may result in minor or moderate injury.***

NOTE: Indicates important information, that if not followed, may cause damage to equipment.

General Safety Information

1. Read these rules and instructions carefully. Failure to follow these instructions could cause serious bodily injury and/or property damage.

DANGER ***This pump is non-submersible.***

WARNING ***This product contains chemicals known to the State of California to cause cancer and birth defects or other reproductive harm.***

WARNING ***Pump only clear water. Do not pump flammable or explosive fluids such as gasoline, fuel oil, kerosene, etc. Do not use in a flammable and/or explosive atmosphere. Personal injury and/or property damage could result.***

NOTE: This pump is not designed to handle salt water, brine, laundry discharge or any other application which may contain caustic chemicals and/or foreign materials. Pump damage could occur if used in these applications and will void warranty.

WARNING ***All wiring must be performed by a qualified electrician. The pump must be installed in compliance with all local and national codes.***

2. Connect this product to a grounded circuit equipped with a ground fault circuit interruptor (GFCI) device.
3. Before installing this product, have the electrical circuit checked by an electrician to ensure proper grounding.
4. BE CERTAIN the pump power source is disconnected before installing or servicing pump.
5. Be sure the water source and piping are clear of sand, dirt and scale. Debris will clog pump and void warranty.
6. Failure to protect pump and piping from freezing could cause severe damage and will void the warranty.
7. Do not run pump dry.

Installation

PUMPING FROM LAKES, PONDS OR SMALL STREAMS

1. Locate pump as close as possible to the water source, keeping the vertical distance from the water to pump as small as possible. Place pump on level support. Protect against flooding and excessive moisture.
2. Long lengths of pipe or hose and use of many fittings will reduce pump flow. Use the smallest number of fittings and shortest possible length of pipe or hose.
4. Connect inlet pipe or hose to pump. The inlet connection is designed for 1" NPT thread. Rigid pipe such as PVC will work fine for inlet and outlet pipe. (Reminder: Minimize length of pipe and number of fittings.) An adapter for garden hose is included (see Figure 1).

© 2011. All rights reserved.

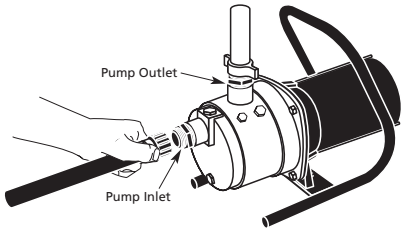

Figure 1 IL0455

NOTE: The inlet hose must be a reinforced type when pumping from lakes, ponds, or small streams. Regular garden hose will collapse and lead to pump failure.

5. A foot valve with strainer should be used to maintain prime during operation.
6. Seal all connections in the inlet hose. An air leak in the fittings, hose, pipe or connections will draw air even though no water leaks out. These inlet leaks will reduce pump performance and lead to pump failure.
7. Connect outlet pipe or hose to pump. The outlet connection is designed for 1" NPT thread. Rigid pipe such as PVC or garden hose may be used. An adapter to garden hose thread is included (Figure 1).

BOOSTING WATER PRESSURE

CAUTION ***Do not run pump with outlet pipe or nozzle closed. The hose may burst from excessive pressure. Use only reinforced high-pressure hose or pipe for outlet pipe.***

1. Connect inlet pipe or hose to pump. An adapter to garden hose thread is included (Figure 1).
2. Connect the other end of inlet line to water supply.
3. Connect outlet pipe, or hose to pump.

Operation

CAUTION ***Never run the pump dry. Running pump without water will cause seal failure. Fill pump with water before starting.***

1. Remove priming port on pump and fill with water. Reinstall priming port on pump (see Figure 2). For boosting water pressure: Do not remove priming port. Turn on water supply.

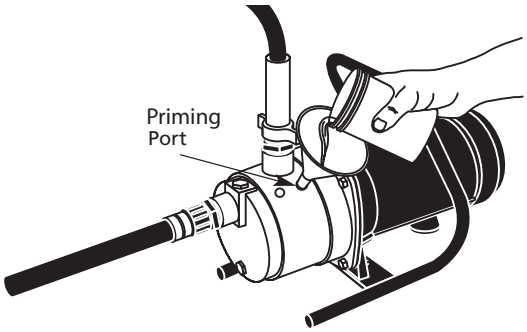

Figure 2

WARNING ***Risk of electrical shock! This pump is supplied with a grounding conductor and grounding type attachment plug. Use a grounded receptacle to reduce the risk of fatal electric shock.***

WARNING ***Never cut off the round grounding prong on the power cord. Cutting the cord or plug will make the pump unsafe to operate and void the warranty.***

2. Turn the pump switch to the "off" position.
3. This pump is only for use on 120 volt (single phase), 60 Hz, 15 amp service and is equipped with a 3-conductor cord and e-prong, grounding type plug. Insert power cord directly into GFCI outlet (see Figure 3).

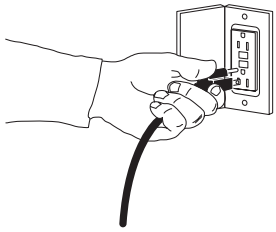

IL0459

Figure 3

4. Turn pump switch to the "on" position (see Figure 4). If the pump does not pump water within 5 minutes, turn off pump and refill with clean water. If the pump does not operate after repeated attempts, check the following:
   - Vertical distance of pump to water level must not be over 20 feet.
   - Suction line must be airtight.
   - All valves in suction and discharge line must be open.

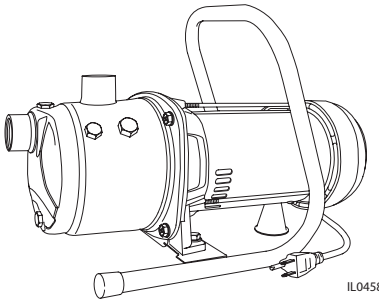

IL0458

Maintenance

Maintain adequate ventilation for the pump motor. The motor bearings are permanently lubricated at the factory. Additional lubrication is not required.

DRAINING FOR WINTER

Always protect pump and piping against freezing temperatures. If there is any danger of freezing, drain the system.

1. Disconnect suction and discharge lines from pump.

© 2011. All rights reserved.

2. Remove plug from lower front face of pump.
3. Drain all piping below the frost line, or store piping indoors.
4. Store pump indoors.

See Figure 5 for replacement parts.

Troubleshooting Chart

SYMPTOM	POSSIBLE CAUSE(S)	CORRECTIVE ACTION
Motor will not run	1. Disconnect switch is off 2. Fuse is blown 3. Starting switch is defective 4. Wires at motor are loose, disconnected or wired incorrectly.	1. Be sure switch is on 2. Replace fuse 3. Replace starting switch 4. Refer to wiring instructions. Check and tighten all wiring. **WARNING** ***Capacitor voltage may be hazardous. To discharge capacitor, touch short capacitor terminals with an insulated screwdriver. BE SURE to hold handle of screwdriver while making contact with capacitor terminals.***
Motor runs hot and overload kicks off	1. Motor is wired incorrectly 2. Voltage is too low 3. Pump house not properly vented	1. Refer to wiring instructions 2. Check with power company. Install heavier wiring if wire size is too small (See Wiring Chart). 3. Be sure pump has sufficient ventilation to cool the motor
Motor runs but no water is delivered. NOTE: Check prime before looking for other causes. Unscrew priming plug and see if water is in priming hole.	1. Pump in new installation did not pick up prime through: a. Improper priming b. Air leaks c. Leaking foot valve 2. Pump has lost prime through: a. Air leaks b. Water level below suction of pump 3. Impeller is plugged 4. Check valve or foot valve is stuck in closed position 5. Pipes are frozen 6. Foot valve and/or strainer are buried in sand or mud	New Installation: a. Re-prime according to instructions b. Check all connections on suction line c. Replace foot valve 2. Existing Installations: a. Check all connections on suction line and shaft seal b. Lower suction line into water and re-prime. If receding water level in well exceeds suction lift, a deep well pump is needed 3. Clean impeller 4. Replace check valve or foot valve 5. Thaw pipes. Bury pipe below frost line. Heat pit or pump house 6. Raise foot valve and/or strainer above well bottom
Pump does not deliver water to full capacity	1. Water level in well is lower than estimated	1. A deep well jet pump may be needed (over 25 ft. (7.6M) to water)
	2. Steel piping (if used) is corroded or limed, causing excess friction	2. Replace with plastic pipe where possible, otherwise with new steel pipe
	3. Piping is too small in size	3. Use larger piping

© 2011. All rights reserved.

REPLACEMENT PARTS LIST
MODEL HSPJ100, SPJ100

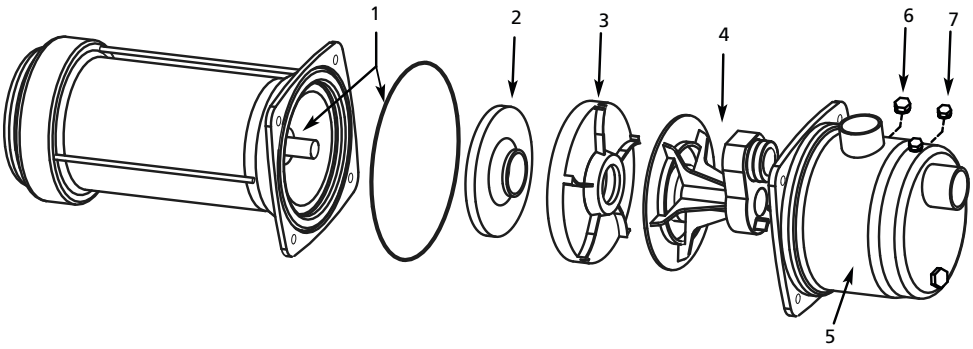

IL0456

Ref. No.	Description	Part Number	Qty.
*1	Shaft seal and gasket	Kit #021337	1
*2	Impeller		1
*3	Diffuser		1
*4	Nozzle assembly		1
5	Pump housing	021334	1
6	Large plug & O-Ring	021335	1
7	Small Plug & O-Ring	021336	3

*Purchase as a kit. Order #021337.

ONE YEAR LIMITED WARRANTY

This product is warranted for one year from the date of purchase or two years from the date of manufacture, whichever occurs first. Subject to the conditions hereinafter set forth, the manufacturer will repair or replace to the original consumer, any portion of the product which proves defective due to defective materials or workmanship. To obtain warranty service, contact the dealer from whom the product was purchased. The manufacturer retains the sole right and option to determine whether to repair or replace defective equipment, parts or components. Damage due to conditions beyond the control of the manufacturer is not covered by this warranty.

THIS WARRANTY WILL NOT APPLY: (a) To defects or malfunctions resulting from failure to properly install, operate or maintain the unit in accordance with printed instructions provided; (b) to failures resulting from abuse, accident or negligence or use of inappropriate chemicals or additives in the water; (c) to normal maintenance services and the parts used in connection with such service; (d) to units which are not installed in accordance with normal applicable local codes, ordinances and good trade practices; and (e) the unit is used for purposes other than for what it was designed and manufactured.

RETURN OF WARRANTED COMPONENTS: Any item to be repaired or replaced under this warranty must be returned to the manufacturer at Kendallville, Indiana or such other place as the manufacturer may designate, freight prepaid.

THE WARRANTY PROVIDED HEREIN IS IN LIEU OF ALL OTHER EXPRESS WARRANTIES, AND MAY NOT BE EXTENDED OR MODIFIED BY ANYONE. ANY IMPLIED WARRANTIES SHALL BE LIMITED TO THE PERIOD OF THE LIMITED WARRANTY AND THEREAFTER ALL SUCH IMPLIED WARRANTIES ARE DISCLAIMED AND EXCLUDED. THE MANUFACTURER SHALL NOT, UNDER ANY CIRCUMSTANCES, BE LIABLE FOR INCIDENTAL, CONSEQUENTIAL OR SPECIAL DAMAGES, SUCH AS, BUT NOT LIMITED TO DAMAGE TO, OR LOSS OF, OTHER PROPERTY OR EQUIPMENT, LOSS OF PROFITS, INCONVENIENCE , OR OTHER INCIDENTAL OR CONSEQUENTIAL DAMAGES OF ANY TYPE OR NATURE. THE LIABILITY OF THE MANUFACTURER SHALL NOT EXCEED THE PRICE OF THE PRODUCT UPON WHICH SUCH LIABILITY IS BASED.

This warranty gives you specific legal rights, and you may have other rights which vary from state to state. Some states do not allow limitations on duration of implied warranties or exclusion of incidental or consequential damages, so the above limitations may not apply to you.

WARRANTY VALID IN CANADA AND MEXICO.

© 2011. All rights reserved.